SABINE RIVER AUTHORITY OF TEXAS

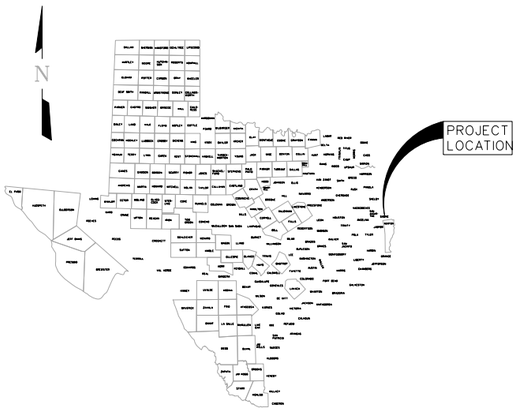

CONSTRUCTION DRAWINGS FOR
N BAYOU RD & BAYOU FORK RD
ROADWAY & DRAINAGE IMPROVEMENTS
RFB #23-1208

APRIL 2023

ISSUE FOR BID

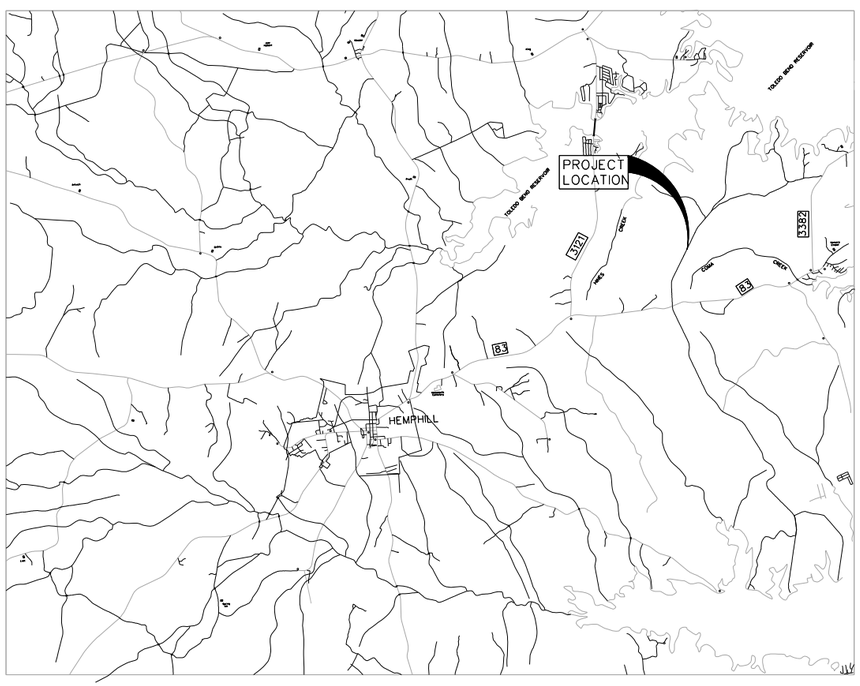

VICINITY MAP
N.T.S

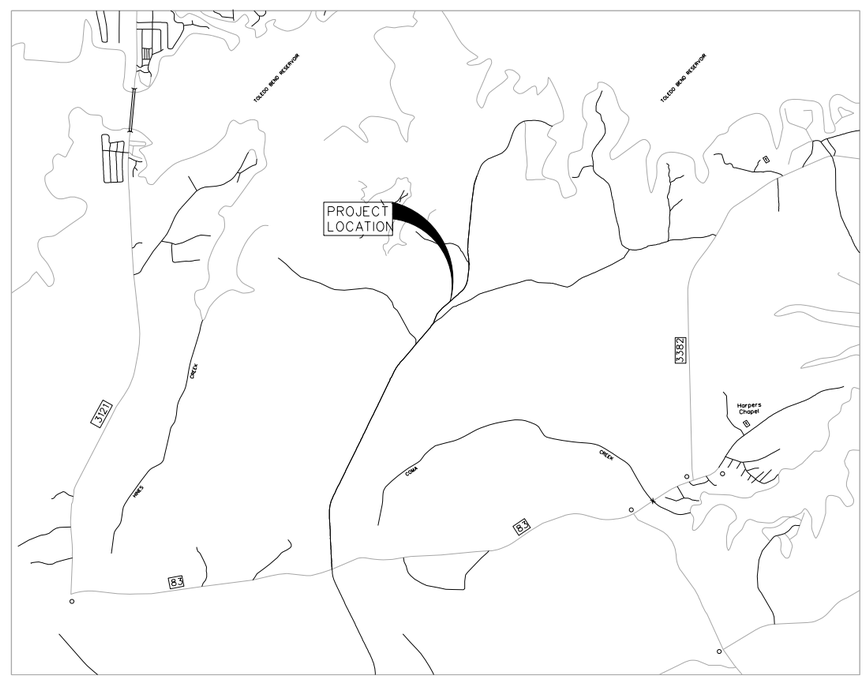

LOCATION MAP
N.T.S

INDEX

SHEET NO.	DESCRIPTION
1	COVER
2	GENERAL NOTES
3-5	PROJECT LAYOUT
6	QUANTITY SUMMARY SHEETS
7	SURVEY CONTROL SHEETS
8 - 22	BORING LOG SHEETS
23	TYPICAL SECTIONS
24	N BAYOU RD DETOUR PLAN
25 - 32	TRAFFIC CONTROL STANDARDS
33 - 47	ROADWAY AND DRAINAGE PLANS
48 - 49	ROADWAY AND DRAINAGE STANDARDS
50 - 53	SIGNING AND PAVEMENT MARKING STANDARDS
54 - 68	STORM WATER POLLUTION PREVENTION PLANS
69 - 70	SW3P STANDARDS

FREESE AND NICHOLS
10497 Town and Country Way,
Suite 500
Houston, Texas 77024
Phone - (713) 600-6800
Web - www.freese.com

STATE OF TEXAS
COURTNEY I CUNNINGHAM
141398
LICENSED
PROFESSIONAL ENGINEER
04-11-2023

SRA22771

ISSUE FOR BID

GENERAL NOTES

1. THE FOLLOWING NOTES ARE GENERAL AND APPLY TO ALL SHEETS OF THESE CONTRACT DOCUMENTS AS IF THEY WERE WRITTEN IN THEIR ENTIRETY ON EACH SHEET.

2. COORDINATE ALL WORK WITH THE SABINE RIVER AUTHORITY (SRA) DIVISION MANAGER - DAVID WILLIAMS (409) 746-2111.

3. CONTRACTOR SHALL BE RESPONSIBLE FOR OBTAINING ALL NECESSARY PERMITS AND BONDS PRIOR TO START OF CONSTRUCTION WORK.

4. CONTRACTOR SHALL BE RESPONSIBLE FOR ANY DAMAGE TO THE EXISTING MAINTENANCE/ACCESS ROADS AND PROVIDE ALL WEATHER INGRESS AND EGRESS FOR SRA MAINTENANCE AND OPERATOR PERSONNEL AT ALL TIMES.

5. ALL CONSTRUCTION TO BE IN ACCORDANCE WITH THE CONTRACT DOCUMENTS AND BE SUBJECT TO INSPECTION BY THE SRA AND THE ENGINEER.

6. ELEVATIONS ARE REFERENCED TO NORTH AMERICAN VERTICAL DATUM OF 1988 (NAVD88) US SURVEY FEET. HORIZONTAL DATUM AND DISTANCES ARE REFERENCED TO TEXAS STATE PLANE NAD83 CENTRAL, US SURVEY FEET

7. PUBLIC AND PRIVATE UTILITY LINES AND CUSTOMER SERVICE LINES MAY EXIST THAT ARE NOT SHOWN ON THE CONSTRUCTION DRAWINGS. IT SHALL BE THE CONTRACTOR'S RESPONSIBILITY TO LOCATE, MAINTAIN AND PROTECT THE INTEGRITY OF THESE LINES.

8. CONTRACTOR SHALL VERIFY LOCATIONS OF UNDERGROUND UTILITY LINES PRIOR TO BEGINNING WORK. CALL 811 AT LEAST 48 HOURS BEFORE PROCEEDING WITH ANY EXCAVATION. CONTRACTOR SHALL IMMEDIATELY NOTIFY SRA AND ENGINEER OF ANY POTENTIAL CONFLICTS BEFORE BEGINNING EXCAVATION.

9. CONTRACTOR SHALL BE RESPONSIBLE FOR PROTECTING EXISTING STRUCTURES, UTILITIES, TREES, SHRUBS, FENCES, AND OTHER ADJOINING FACILITIES AND REPAIR OR REPLACE TO ORIGINAL OR BETTER CONDITION DUE TO DAMAGE CAUSED BY CONTRACTOR AT NO COST TO SRA.

10. RECONSTRUCT ALL DRAINAGE DITCHES DISTURBED BY CONSTRUCTION TO ORIGINAL OR BETTER CONDITION UTILIZING SAME FLOWLINES AND HYDRAULIC CAPACITY FOR STORM WATER SYSTEMS. CONTRACTOR SHALL MAINTAIN FLOW IN DRAINAGE DITCHES AT ALL TIMES. METHODS USED BY CONTRACTOR TO MAINTAIN FLOW IN DITCH MUST BE ACCEPTABLE TO SRA AND ENGINEER.

11. CONTRACTOR SHALL BE RESPONSIBLE FOR PROVIDING ANY AND ALL TEMPORARY SLOPE PROTECTION NECESSARY TO PREVENT ALL LEVEE EMBANKMENTS FROM SLOUGHING DURING CONSTRUCTION. TEMPORARY MEASURES ARE TO BE REMOVED WHEN CONSTRUCTION IS COMPLETED. CONTRACTOR'S FAILURE TO ADEQUATELY PROTECT/MAINTAIN SLOPES WHICH RESULTS IN SLOUGHING SHALL BE REPAIRED UNDER SRA DIRECTION AT NO COST TO SRA.

12. THE CONTRACTOR SHALL NOT DISPOSE OF ANY EXCAVATED MATERIALS WITHIN AN AREA DESIGNED AS BEING WITHIN THE 100-YEAR SPECIAL FLOOD HAZARD AREA. IT SHALL BE THE CONTRACTOR'S RESPONSIBILITY TO VERIFY THE FLOOD PLAIN STATUS OF ANY PROPOSED DISPOSAL SITE.

13. CONTRACTOR SHALL BE RESPONSIBLE FOR PROVIDING REQUIRED SECURITY TO PROTECT HIS PROPERTY, EQUIPMENT, WORK IN PROGRESS AND COMPLETED WORK.

14. CONTRACTOR SHALL MAINTAIN THE PROJECT SITE SUCH THAT ACCESS TO THE ENTIRETY OF THE UNION PACIFIC RAILROAD'S FACILITIES IS UNINHIBITED THROUGHOUT THE PROJECT'S DURATION.

15. THE UNION PACIFIC RAILROAD LINE WILL REMAIN IN OPERATION THROUGHOUT CONSTRUCTION. CONTRACTOR'S WORK MUST REMAIN OUTSIDE OF THE UPRR ZONE OF INFLUENCE AND NOT DISRUPT ITS OPERATION.

16. CONTRACTOR SHALL PREVENT RUTS OR DAMAGE TO CANAL EMBANKMENTS. ALL INCIDENTAL DAMAGE TO EMBANKMENTS OR GRADES SHALL BE REPAIRED TO REMOVE ALL RUTS AND OTHER DAMAGE CREATED BY EQUIPMENT DURING CONSTRUCTION PROCESS AT NO COST TO SRA.

17. EXISTING PAVEMENTS, CURBS, SIDEWALKS AND DRIVEWAYS DAMAGED OR REMOVED DURING CONSTRUCTION SHALL BE REPAIRED OR REPLACED TO IN KIND OR BETTER CONDITION AT NO COST TO SRA.

18. CONTRACTOR IS RESPONSIBLE FOR ALL TRENCH SAFETY. THE CONTRACTOR SHALL CONSTRUCT THE PROPOSED OPEN CUT INSTALLATION USING A TRENCH SAFETY PLAN PREPARED BY A PROFESSIONAL ENGINEER LICENSED IN THE STATE OF TEXAS. THIS TRENCH SAFETY PLAN SHALL BE SUBMITTED PRIOR TO ANY WORK ACTIVITIES. REFER TO SECTION 31 23 33.14 TRENCH SAFETY.

19. EXISTING STRUCTURES, UTILITIES AND PIPING ARE SHOWN FROM AVAILABLE RECORDS AT THE TIME THIS PLAN WAS PREPARED. THE CONTRACTOR SHALL BE RESPONSIBLE TO DETERMINE AND VERIFY THE LOCATION AND DEPTH OF ALL EXISTING STRUCTURES, UTILITIES AND PIPING WITHIN THE CONSTRUCTION AREA PRIOR TO THE BEGINNING OF CONSTRUCTION. ANY DAMAGE TO THE EXISTING STRUCTURES, UTILITIES AND PIPING SHALL BE RESTORED AT NO ADDITIONAL COST TO SRA. IN ADDITION, CONTRACTOR SHALL NOTIFY ENGINEER IF THERE IS A CONFLICT BETWEEN THE CONTRACT DOCUMENTS AND EXISTING CONSTRUCTION BEFORE PROCEEDING WITH WORK.

20. CONTRACTOR SHALL COMPLETELY REMOVE AND PROPERLY DISPOSE OF ALL FEATURES DESIGNATED FOR DEMOLITION.

21. PIPES DESIGNATED TO BE DEMOLISHED SHALL BE COMPLETELY REMOVED, UNLESS OTHERWISE APPROVED BY THE ENGINEER. PIPES ABANDONED IN PLACE SHALL BE EMPTIED, CLEANED OF SILT AND/OR DEBRIS, GROUT FILLED, AS SHOWN ON THE DRAWINGS, AND PLUGGED WITH 3' OF CONCRETE AT EACH END.

22. DIMENSIONS AND ELEVATIONS RELATED TO EXISTING UTILITIES WERE OBTAINED FROM PREVIOUS CONSTRUCTION/RECORD DRAWINGS. ALL EXISTING DIMENSIONS AND ELEVATIONS SHALL BE VERIFIED IN THE FIELD BY THE CONTRACTOR.

23. ALL DEMOLISHED STRUCTURES AND EXCESS EXCAVATED SOILS BECOME THE PROPERTY OF THE CONTRACTOR AND SHALL BE REMOVED AND DISPOSED OF IMMEDIATELY IN ACCORDANCE WITH FEDERAL, STATE AND LOCAL LAWS, REGULATIONS AND OTHER ORDINANCES. FURNISH WRITTEN VERIFICATION FROM SRA OF THE DISPOSAL SITE AUTHORIZING THE CONTRACTOR TO DISPOSE OF MATERIALS AT THAT LOCATION.

24. EXISTING CONTOURS IN PLANS ARE SHOWN FOR TERRAIN RELIEF ONLY. ALL ELEVATIONS SHALL BE VERIFIED.

25. EXCAVATION ADJACENT TO EXISTING UTILITIES TO REMAIN OR CROSSING UTILITIES SHALL BE EXCAVATED BY HAND AND IN SUCH A MANNER AS TO AVOID DAMAGE TO THE EXISTING FACILITIES.

26. PROPOSED CONTOUR LINES, SPOT ELEVATIONS AND SLOPE INDICATORS REPRESENT FINISHED GRADES.

27. CONTRACTOR SHALL BE RESPONSIBLE FOR CLEAN-UP OF THE SITE AND ADJOINING ACCESS ROADS AFTER CONSTRUCTION EVERYDAY. ALL ACCESS ROADS TO BE RESTORED TO ORIGINAL OR BETTER CONDITION AT NO COST TO SRA.

28. BURNING TRASH OR DEBRIS AT THE PROJECT SITE IS NOT ALLOWED.

CARE OF WATER

1. CONTRACTOR IS RESPONSIBLE FOR ALL WATER CONTROL AND DEWATERING NECESSARY TO PROTECT THE PROJECT AREA IN ORDER TO PERFORM PROPOSED WORK IN THE DRY, INCLUDING CANAL WATER, GROUND WATER (STATIC OR PRESSURIZED) AND SURFACE WATER. THIS COULD INCLUDE COFFERDAMS (EARTH, SHEET PILING, PORTADAM SYSTEM, AQUADAM SYSTEM, OR OTHER APPROVED COFFERDAM, DEEP WELLS/WELL POINTS, BYPASS PUMPING, ETC.) TEMPORARY MEASURES SHALL BE REMOVED AT THE END OF CONSTRUCTION OR UNTIL THE TEMPORARY MEASURES HAVE MET THEIR INTENDED PURPOSE.

2. GROUNDWATER SHALL BE REDUCED TO NO LESS THAN 3-FT BELOW THE BOTTOM OF EXCAVATION OF THE HEADWALL STRUCTURES AT ALL TIMES DURING CONSTRUCTION.

3. CONTRACTOR TO PROTECT EXPOSED SOILS FROM DESICCATION DURING CONSTRUCTION.

4. 3" THICK LEAN CONCRETE SLABS SHOULD BE INCLUDED BENEATH CONCRETE STRUCTURES.

5. A MINIMUM FLOW OF 20 MGD SHALL BE MAINTAINED AT ALL TIMES BY CONTRACTOR. METHOD USED BY CONTRACTOR TO MAINTAIN FLOW IN SRA CANAL MUST BE SUBMITTED TO ENGINEER AND SRA FOR APPROVAL. ANY CHANGE OR DEVIATION TO APPROVED METHOD MUST BE RESUBMITTED AND APPROVED BY SRA.

STORMWATER POLLUTION PREVENTION PLAN

1. THE CONTRACTOR SHALL CONTROL EROSION AND SEDIMENTATION PER APPLICABLE JURISDICTIONAL PERMITS, LAWS, AND REGULATIONS.

2. CONTRACTOR SHALL PROVIDE TEMPORARY STRUCTURAL OR NON-STRUCTURAL STORMWATER PROTECTION AND POLLUTION PREVENTION MEASURES (SWPPP) THROUGHOUT THE PROJECT SITE WHERE REQUIRED. METHODS USED BY CONTRACTOR TO MAINTAIN FLOW IN DITCH AND PROVIDE SWPPP MEASURES MUST BE ACCEPTABLE TO SRA AND THE ENGINEER.

3. THE CONTRACTOR SHALL MINIMIZE TURBIDITY IN WATERWAYS DURING ALL PHASES OF THE PROJECT. THE CONTRACTOR SHALL EMPLOY ADEQUATE METHODS TO ENSURE MINIMUM TURBIDITY FROM NEAR AND LONG-TERM EROSION FROM FILLS, SPOIL, AND DEVEGETATED AREAS DURING AND FOLLOWING CONSTRUCTION.

4. CONTRACTOR SHALL RE-ESTABLISH THE GRASS AND MAINTAIN IT IN ALL AREAS THAT ARE DAMAGED OR DISTURBED BY CONSTRUCTION ACTIVITIES UNTIL SUCH TIME THAT THE GRASS IS FULLY GROWN AND ABLE TO PROVIDE EROSION PROTECTION FROM STORMWATER RUNOFF WITHOUT THE ASSISTANCE OF ANY TEMPORARY SWPPP MEASURES.

5. THE CONTRACTOR SHALL NOT BE ALLOWED TO EXCAVATE LEVEE/EMBANKMENT MATERIAL TO INSTALL EROSION AND SEDIMENT CONTROL DEVICES.

SEQUENCE OF CONSTRUCTION NOTES

1. PHASE 1 CONSTRUCT N BAYOU RD FROM OLD SABINETOWN RD TO BAYOU FORK RD

   CLOSE N BAYOU RD FROM OLD SABINETOWN RD TO BAYOU FORK RD BY PLACING BARRICADES AND SIGNS AS SHOWN ON ADVANCED WARNING SIGN AND DETOUR PLAN SHEETS.
   PLACE STORM WATER POLLUTION PREVENTION MEASURES ALONG THE CONSTRUCTION ZONE AS SHOWN ON THE SW3P SHEETS.
   REMOVE AND SET CMP CROSS CULVERTS AS SHOWN ON PLANS.
   RECONSTRUCT PAVEMENT AS SHOWN ON THE PLANS.
   PLACE DELINEATORS AS SHOWN ON THE PLANS.
   REOPEN NEW PAVEMENT TO TRAFFIC.

2. PHASE 2 CONSTRUCT CROSS CULVERTS AT STA 122+26.63 BAYOU FORK RD

   CLOSE BAYOU FORK RD FROM STA 122+13 TO STA 122+52.
   PLACE STORM WATER POLLUTION PREVENTION MEASURES ALONG THE CONSTRUCTION ZONE AS SHOWN ON THE SW3P SHEETS.
   PLACE BARRICADES AND SIGNS AS SHOWN ON ADVANCED WARNING SIGN SHEETS.
   REMOVE AND REPLACE CMP CROSS CULVERT AS SHOWN ON PLANS.
   RECONSTRUCT PAVEMENT IN TO BE DRIVEABLE. DO NOT LEAVE ANY PAVEMENT EDGE DROPOFFS OVERNIGHT.
   REOPEN TO TRAFFIC.
   COORDINATE WITH LOCAL OFFICIALS/PROPERTY OWNERS ON ROAD CLOSURES.
   MAINTAIN ACCESS WHEN NEEDED.

3. PHASE 3 CONSTRUCT CROSS CULVERTS AT STA 132+43.07 BAYOU FORK RD

   CLOSE BAYOU FORK RD FROM STA 131+87 TO STA 132+56.
   PLACE STORM WATER POLLUTION PREVENTION MEASURES ALONG THE CONSTRUCTION ZONE AS SHOWN ON THE SW3P SHEETS.
   PLACE BARRICADES AND SIGNS AS SHOWN ON ADVANCED WARNING SIGN SHEETS.
   REMOVE AND REPLACE CMP CROSS CULVERT AS SHOWN ON PLANS.
   RECONSTRUCT PAVEMENT IN TO BE DRIVEABLE. DO NOT LEAVE ANY PAVEMENT EDGE DROPOFFS OVERNIGHT.
   REOPEN TO TRAFFIC.
   COORDINATE WITH LOCAL OFFICIALS/PROPERTY OWNERS ON ROAD CLOSURES.
   MAINTAIN ACCESS WHEN NEEDED.

SEQUENCE OF CONSTRUCTION NOTES CONTINUED

4. PHASE 4 CONSTRUCT CROSS CULVERTS AT STA 144+13.62 BAYOU FORK RD

   CLOSE BAYOU FORK RD FROM STA 143+25 TO STA 144+61.
   PLACE STORM WATER POLLUTION PREVENTION MEASURES ALONG THE CONSTRUCTION ZONE AS SHOWN ON THE SW3P SHEETS.
   PLACE BARRICADES AND SIGNS AS SHOWN ON ADVANCED WARNING SIGN SHEETS.
   REMOVE AND REPLACE CMP CROSS CULVERT AS SHOWN ON PLANS.
   RECONSTRUCT PAVEMENT IN TO BE DRIVEABLE. DO NOT LEAVE ANY PAVEMENT EDGE DROPOFFS OVERNIGHT.
   REOPEN TO TRAFFIC.
   COORDINATE WITH LOCAL OFFICIALS/PROPERTY OWNERS ON ROAD CLOSURES.
   MAINTAIN ACCESS WHEN NEEDED.

5. PHASE 5 CONSTRUCT BAYOU FORK RD FROM N BAYOU RD TO PROJECT END

   PLACE STORM WATER POLLUTION PREVENTION MEASURES ALONG THE CONSTRUCTION ZONE AS SHOWN ON THE SW3P SHEETS.
   PLACE BARRICADES AND SIGNS AS SHOWN ON ADVANCED WARNING SIGN SHEETS.
   MAINTAIN ACCESS TO ADJACENT PROPERTIES AT ALL TIMES BY ONLY CLOSING HALF OF THE ROAD AT A TIME.
   RECONSTRUCT PAVEMENT IN HALF SECTIONS AS SHOWN ON THE PLANS. DO NOT LEAVE ANY PAVEMENT EDGE DROPOFFS OVERNIGHT.
   PLACE DELINEATORS AS SHOWN ON THE PLANS.
   PUNCH LIST, FINAL CLEAN UP, AND OPEN ROAD TO TRAFFIC.

GENERAL NOTES CONTINUED

29. EVEN THOUGH 10" CRUSHED STONE IS SHOWN ON THE TYPICAL SECTIONS, THE THICKNESS MAY VARY IN THE FIELD DUE TO IRREGULARITIES IN THE EXISTING ROADWAY CROSS SLOPE. THE PAYMENT OF THE ITEM IS SET UP IN CY IN ORDER TO BEST CAPTURE THE ESTIMATED QUANTITY OF MATERIAL NEEDED.

ISSUE FOR BID

FREESE AND NICHOLS, INC.
TEXAS REGISTERED ENGINEERING FIRM F-2144
STATE OF TEXAS
COURTNEY I CUNNINGHAM
141398
LICENSED PROFESSIONAL ENGINEER
04-11-2023
FREESE AND NICHOLS
801 Cherry Street, Suite 2800
Fort Worth, TX 76102
Phone - (817) 735-7300
Web - www.freese.com

SABINE RIVER AUTHORITY TOLEDO BEND FISHING TOURNAMENT SITE
ROADWAY AND DRAINAGE ENGINEERING DESIGN
GENERAL NOTES
SEQUENCE OF CONSTRUCTION NOTES

NO.	ISSUES	BY	DATE

F&N JOB NO. OF00000
DATE 00/00/00
DESIGNED
DRAWN
REVISED
CHECKED
FILE NAME GENERAL NOTES.dgn

VERIFY SCALE Bar is one inch on original drawing. If not one inch on this sheet, adjust scale.
0 1

SHEET
SEQ.

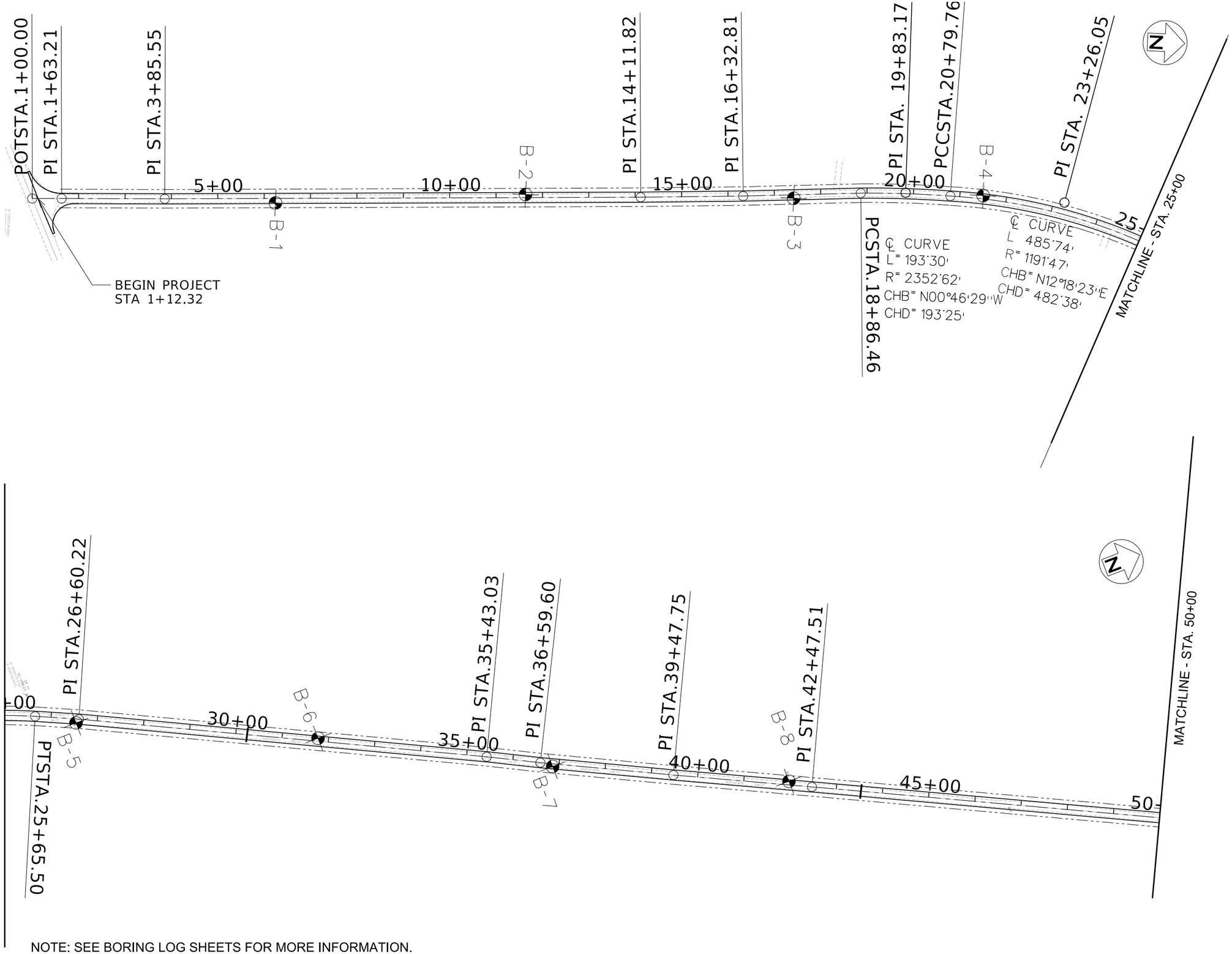

NOTE: SEE BORING LOG SHEETS FOR MORE INFORMATION.

ISSUE FOR BID

FREESE AND NICHOLS, INC.
TEXAS REGISTERED ENGINEERING FIRM F-2144

STATE OF TEXAS
COURTNEY I CUNNINGHAM
141398
LICENSED PROFESSIONAL ENGINEER
04-11-2023

FREESE AND NICHOLS
801 Cherry Street, Suite 2800
Fort Worth, TX 76102
Phone - (817) 735-7300
Web - www.freese.com

SABINE RIVER AUTHORITY TOLEDO BEND FISHING TOURNAMENT SITE

ROADWAY AND DRAINAGE ENGINEERING DESIGN

PROJECT LAYOUT
BEGIN PROJECT TO STA 50+00

NO.	ISSUES	BY	DATE

F&N JOB NO. OFF00000
DATE 00/00/00
DESIGNED
DRAWN
REVISED
CHECKED
FILE NAME PROJ_LAYOUT.dgn

VERIFY SCALE Bar is one inch on original drawing. If not one inch on this sheet, adjust scale.
0 1

SHEET

SEQ.

MicroStation V8 User: freesepw11
Plotter: Color PDF - Adobe PDF
Plot Scale: 200.000 ' / in.
Date: Apr. 03, 2023 - 10:58:18 PM
Model: Default
Project: Freese and Nichols, Inc.

Office:
Date: Apr. 03, 2023 - 10:58:18 PM
User: freesepw11
File: ics02\ICS_pdf_work_dir\3812\28156_3\PROJ_LAYOUT.dgn

MicroStation V8 User: freesepw11lcs02\CS_pdf_work_dir\3812\28156_4\PROJ_LAYOUT02.dgn
Plotter: C:\Program Files (x86)\Common Files\InterPlot\IPLOT\bin\lplotdrvn.plt
Plot Scale: 200.000 ' / in. Model: Default
Date: Apr. 03, 2023 - 10:58:19 PM Project: Freese and Nichols, Inc.

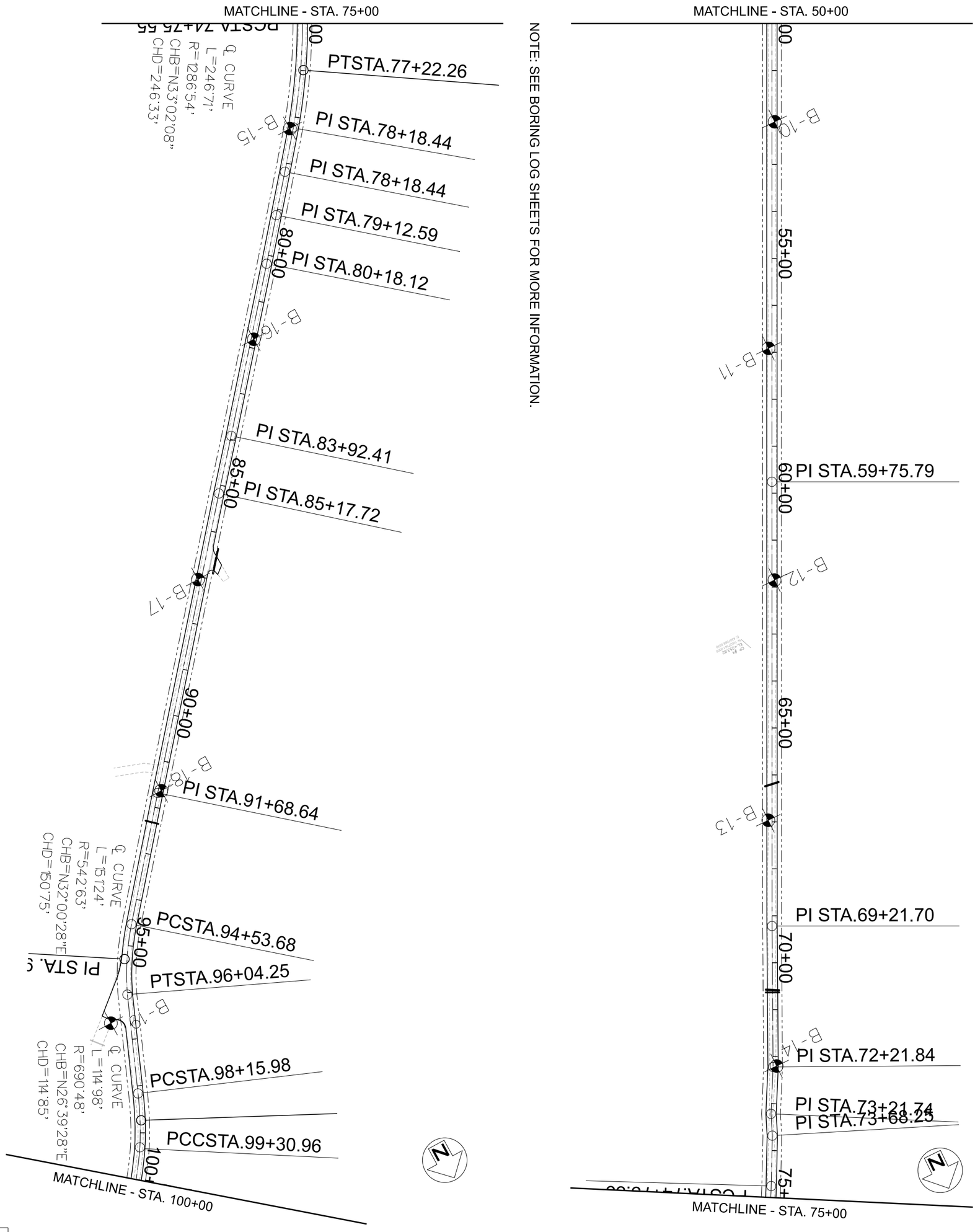

ISSUE FOR BID

NO.	ISSUES	BY	DATE

SEQ. SHEET

VERIFY SCALE 0 1 Bar is one inch on original drawing. If not one inch on this sheet, adjust scale.

F&N JOB NO. OFF00000
DATE 00/00/00
DESIGNED
DRAWN
REVISED
CHECKED
FILE NAME PROJ_LAYOUT02.dgn

SABINE RIVER AUTHORITY TOLEDO BEND FISHING TOURNAMENT SITE

ROADWAY AND DRAINAGE ENGINEERING DESIGN

PROJECT LAYOUT
STA 50+00 TO STA 75+00

FREESE AND NICHOLS
801 Cherry Street, Suite 2800
Fort Worth, TX 76102
Phone - (817) 735-7300
Web - www.freese.com

FREESE AND NICHOLS, INC.
TEXAS REGISTERED ENGINEERING FIRM F-2144

STATE OF TEXAS
COURTNEY I CUNNINGHAM
141398
LICENSED
PROFESSIONAL ENGINEER

04-11-2023

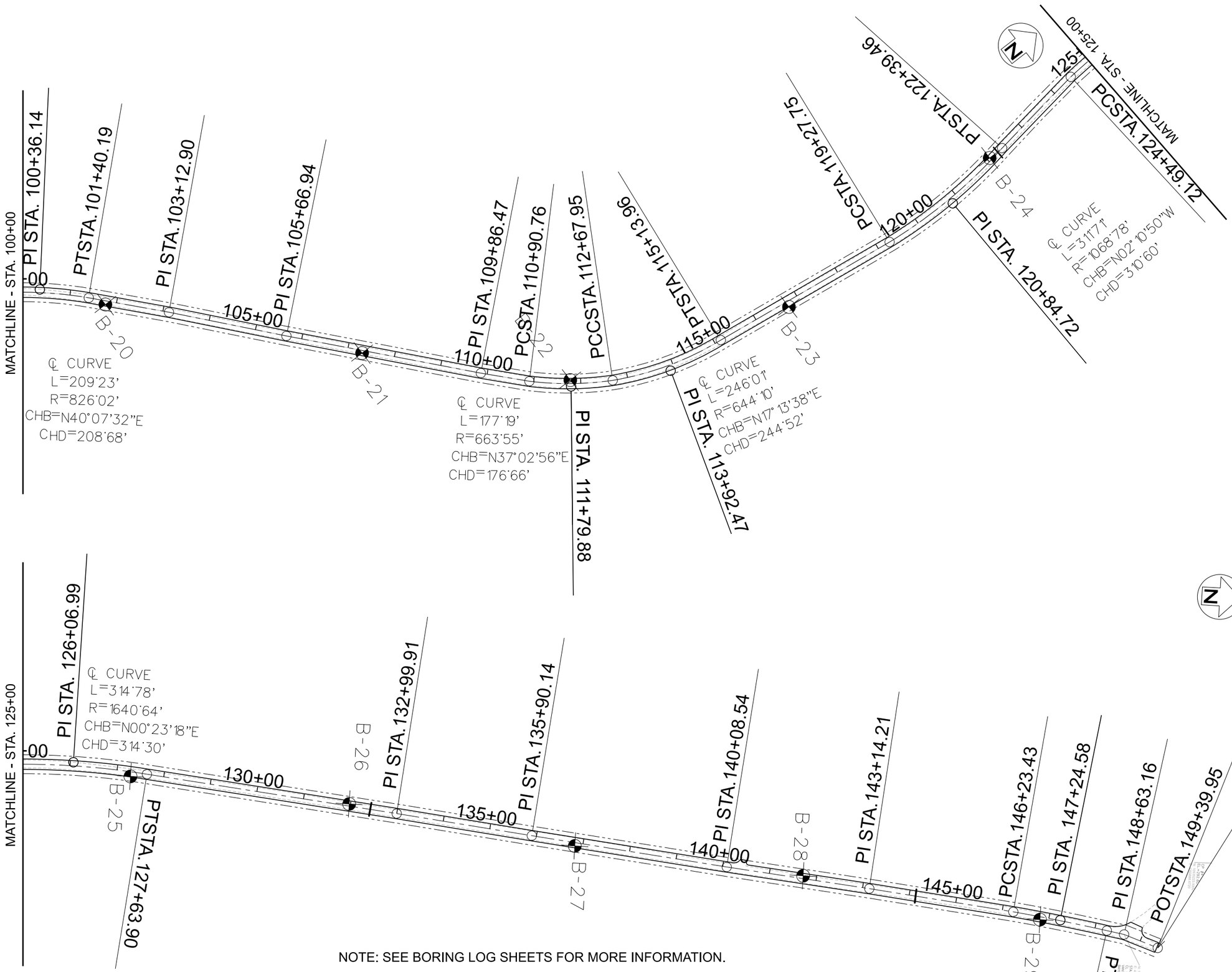

NOTE: SEE BORING LOG SHEETS FOR MORE INFORMATION.

ISSUE FOR BID

FREESE AND NICHOLS, INC.
TEXAS REGISTERED ENGINEERING FIRM F-2144

STATE OF TEXAS
COURTNEY I CUNNINGHAM
141398
LICENSED PROFESSIONAL ENGINEER
04-11-2023

FREESE AND NICHOLS
801 Cherry Street, Suite 2800
Fort Worth, TX 76102
Phone - (817) 735-7300
Web - www.freese.com

SABINE RIVER AUTHORITY TOLEDO BEND FISHING TOURNAMENT SITE
ROADWAY AND DRAINAGE ENGINEERING DESIGN

PROJECT LAYOUT
STA 100+00 TO END PROJECT

NO.	ISSUES	BY	DATE

SHEET

SEQ.

VERIFY SCALE
0 1
Bar is one inch on original drawing.
If not one inch on this sheet, adjust scale.

F&N JOB NO. OFF00000
DATE 00/00/00
DESIGNED
DRAWN
REVISED
CHECKED
FILE NAME PROJ_LAYOUT03.dgn

MicroStation V8 User: freesepw11\ics02
Workspace: C:\Program Files\bentley\microstation\workspace\
Plotter: C:\Program Files\bentley\microstation\pltdrv\pltdrv.pltcfg
Plot Scale: 200.000 ' / in.
Date: Apr 03, 2023 - 10:59:29 PM
Model: Default
Project: Freese and Nichols, Inc.

Office:
Date: Apr. 03, 2023 - 10:58:29 PM
User: freesepw11\ics02
File: C:\Program Files\bentley\microstation\workspace\projects\ICS_pdf_work_dir\3812\28156_5\PROJ_LAYOUT03.dgn

© 2022 THIS DOCUMENT AND THE DESIGNS CONTAINED THEREIN REMAINS THE PROPERTY OF BALLARD CLC, INC. AS AN INSTRUMENT OF PROFESSIONAL SERVICE. IT IS NOT TO BE USED IN WHOLE OR IN PART FOR ANY OTHER SERVICE WITHOUT THE WRITTEN PERMISSION OF BALLARD CLC Inc.

NORTH BAYOU ROAD & NORTH BAYOU FORK ROAD CONTROL SHEET

LOCATED IN:
HEMPHILL, SABINE COUNTY, TEXAS

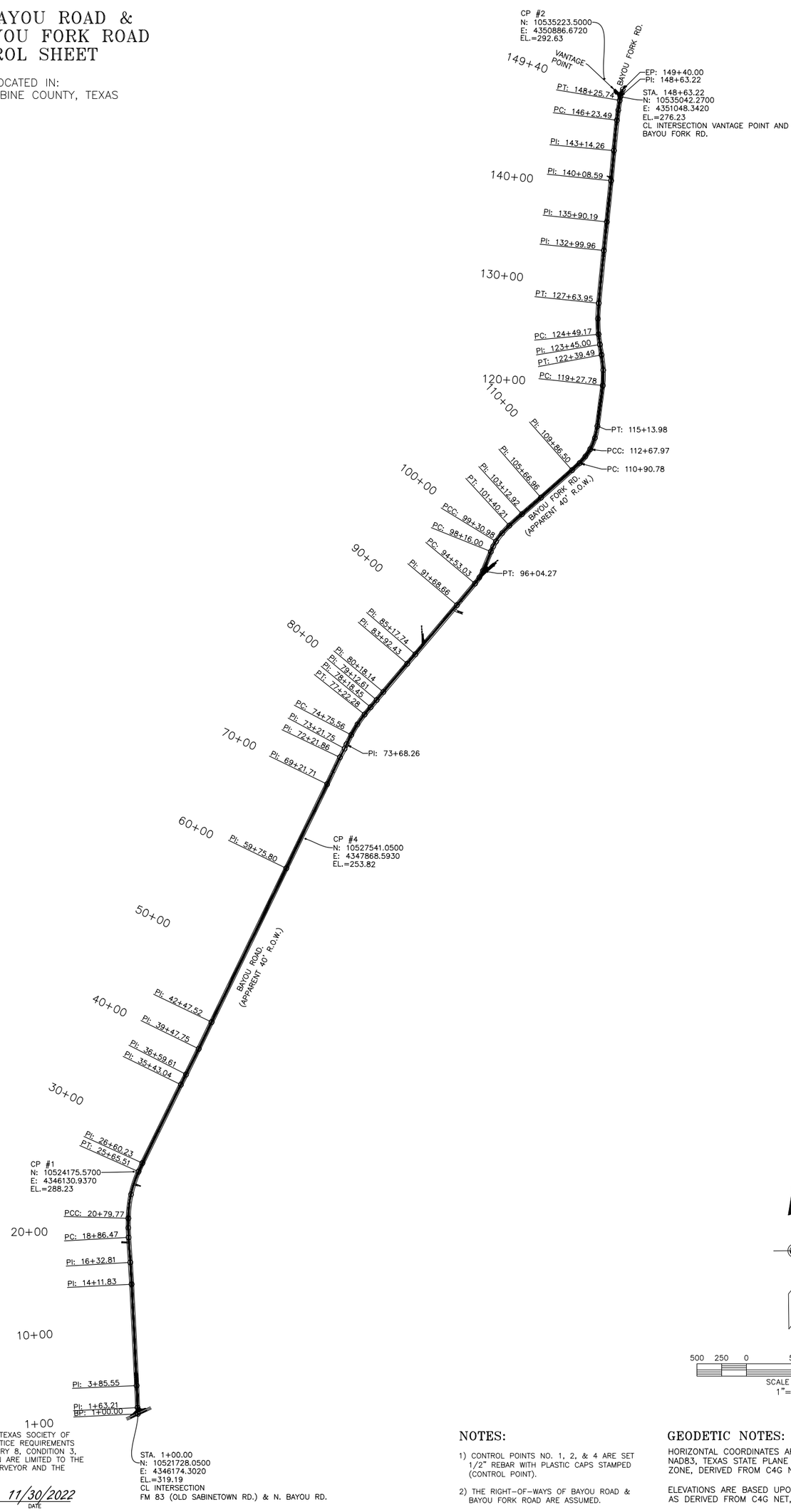

SURVEY CERTIFICATION:

THIS SURVEY COMPLIES WITH THE CURRENT TEXAS SOCIETY OF PROFESSIONAL SURVEYORS MANUAL OF PRACTICE REQUIREMENTS FOR A CATEGORY 7, CONDITION 3 & CATEGORY 8, CONDITION 3, CONTROL SURVEY. FEATURES SHOWN HEREON ARE LIMITED TO THE SCOPE-OF-WORK AGREED UPON BY THE SURVEYOR AND THE CLIENT.

Lee Broom — 11/30/2022

LEE THOMAS BROOM, R.P.L.S.
LICENSE NO. 6783 — DATE

NOTES:

1) CONTROL POINTS NO. 1, 2, & 4 ARE SET 1/2" REBAR WITH PLASTIC CAPS STAMPED (CONTROL POINT).

2) THE RIGHT-OF-WAYS OF BAYOU ROAD & BAYOU FORK ROAD ARE ASSUMED.

GEODETIC NOTES:

HORIZONTAL COORDINATES ARE GRID AND ARE BASED UPON THE NAD83, TEXAS STATE PLANE COORDINATE SYSTEM, CENTRAL ZONE, DERIVED FROM C4G NET, GPS OBSERVATIONS.

ELEVATIONS ARE BASED UPON THE NAVD88 DATUM, GEOID 18, AS DERIVED FROM C4G NET, GPS OBSERVATIONS.

DESIGN	CADD	APPR.
	EC	LTB
SCALE	1" = 500'	
DATE	NOV. 11, 2022	
SERIES	1 OF 1	SHEET
PROJECT NO.	224100	

STATE OF TEXAS REGISTERED LEE THOMAS BROOM 6783 LICENSED LAND SURVEYOR

FOR
SABINE RIVER AUTHORITY

NORTH BAYOU ROAD & NORTH BAYOU FORK ROAD CONTROL SHEET
LOCATED IN:
HEMPHILL, SABINE COUNTY, TEXAS

REVISIONS			
SYMB.	DATE	BY	DESCRIPTION

Ballard CLC, Inc.
Engineers • Planners • Surveyors
1809 Bayou Plaza, Alexandria, LA 71303
TEL: (318) 443-6371 Fax: (318) 448-0257

REMOVAL QUANTITIES

DESCRIPTION	REMOVE EXIST ASPH	REMOVE 12" CMP	OVE 18"	REMOVE 24" CMP
	SY	LF	LF	LF
STA 0+00 TO STA 11+00				
STA 11+00 TO STA 21+00				
STA 21+00 TO STA 31+00	80		24	
STA 31+00 TO STA 41+00				
STA 41+00 TO STA 51+00	122		23	
STA 51+00 TO STA 61+00				
STA 61+00 TO STA 71+00	50		21	46
STA 71+00 TO STA 81+00	50			
STA 81+00 TO STA 91+00			56	
STA 91+00 TO STA 101+00	166		25	
STA 101+00 TO STA 111+00				
STA 111+00 TO STA 121+00				
STA 121+00 TO STA 131+00	78	25		
STA 131+00 TO STA 141+00	138		27	
STA 141+00 TO END	272		25	
TOTAL	956	25	201	46

ROADWAY QUANTITIES

DESCRIPTION	ROW PREPARATION	PROP 2" TY "A"
	STA	TN
STA 0+00 TO STA 11+00	11	286.75
STA 11+00 TO STA 21+00	10	293.33
STA 21+00 TO STA 31+00	10	282.97
STA 31+00 TO STA 41+00	10	244.44
STA 41+00 TO STA 51+00	10	269.48
STA 51+00 TO STA 61+00	10	293.33
STA 61+00 TO STA 71+00	10	273.78
STA 71+00 TO STA 81+00	10	293.30
STA 81+00 TO STA 91+00	10	293.33
STA 91+00 TO STA 101+00	10	278.91
STA 101+00 TO STA 111+00	10	293.31
STA 111+00 TO STA 121+00	10	293.33
STA 121+00 TO STA 131+00	10	285.73
STA 131+00 TO STA 141+00	10	281.75
STA 141+00 TO END	8	238.35
TOTAL	149	4,202

SIGNING & STRIPING QUANTITIES

DESCRIPTION	SMALL RDSD SIGN	SINGLE SZ 1 REFLECTOR (YFLX) (GND)
	EA	EA
STA 0+00 TO STA 11+00	2	
STA 11+00 TO STA 21+00		
STA 21+00 TO STA 31+00		2
STA 31+00 TO STA 41+00		
STA 41+00 TO STA 51+00		2
STA 51+00 TO STA 61+00		
STA 61+00 TO STA 71+00		6
STA 71+00 TO STA 81+00	1	10
STA 81+00 TO STA 91+00		
STA 91+00 TO STA 101+00	2	
STA 101+00 TO STA 111+00		9
STA 111+00 TO STA 121+00		14
STA 121+00 TO STA 131+00		15
STA 131+00 TO STA 141+00		2
STA 141+00 TO END	2	2
TOTAL	7	62

DRAINAGE QUANTITIES

DESCRIPTION	DITCH CLEANING & RESHAPING	PROP 18" CMP	PROP 27" CMP	PROP 36" CMP
	LF	LF	LF	LF
STA 0+00 TO STA 11+00	2,200			
STA 11+00 TO STA 21+00	2,000			
STA 21+00 TO STA 31+00	2,000		31	
STA 31+00 TO STA 41+00	2,000			
STA 41+00 TO STA 51+00	2,000		30	
STA 51+00 TO STA 61+00	2,000			
STA 61+00 TO STA 71+00	2,000		31	63
STA 71+00 TO STA 81+00	2,000			
STA 81+00 TO STA 91+00	2,000		56	
STA 91+00 TO STA 101+00	2,000		30	
STA 101+00 TO STA 111+00	2,000			
STA 111+00 TO STA 121+00	2,000			
STA 121+00 TO STA 131+00	2,000	30		
STA 131+00 TO STA 141+00	2,000		30	
STA 141+00 TO END	1,680		25	
TOTAL	29,880	30	233	63

SW3P QUANTITIES

DESCRIPTION	SEDIMENT CONTROL FENCE	SEDIMENT CONTROL FENCE	ROCK FILTER DAM TY 1	ROCK FILTER DAM TY 1	DRILL SEEDING	HYDROMULCH	FERTILIZER *	VEGETATIVE WATER
	LF	LF	LF	LF	SY	SY	AC	MG
STA 0+00 TO STA 11+00	60	60			2,200	2,200	0.051	6
STA 11+00 TO STA 21+00	160	160			2,200	2,200	0.051	6
STA 21+00 TO STA 31+00	48	48	20	20	2,200	2,200	0.051	6
STA 31+00 TO STA 41+00					2,200	2,200	0.051	6
STA 41+00 TO STA 51+00	48	48	22	22	2,200	2,200	0.051	6
STA 51+00 TO STA 61+00	60	60			2,200	2,200	0.051	6
STA 61+00 TO STA 71+00	96	96	30	30	2,200	2,200	0.051	6
STA 71+00 TO STA 81+00					2,200	2,200	0.051	6
STA 81+00 TO STA 91+00					2,200	2,200	0.051	6
STA 91+00 TO STA 101+00	63	63	16	16	2,200	2,200	0.051	6
STA 101+00 TO STA 111+00					2,200	2,200	0.051	6
STA 111+00 TO STA 121+00					2,200	2,200	0.051	6
STA 121+00 TO STA 131+00	48	48	17	17	2,200	2,200	0.051	6
STA 131+00 TO STA 141+00	48	48	16	16	2,200	2,200	0.051	6
STA 141+00 TO END	48	48	16	16	2,200	2,200	0.051	6
TOTAL	679	679	137	137	33,000	33,000	0.758	91

* FOR CONTRACTOR INFORMATION ONLY

EARTHWORK QUANTITIES

DESCRIPTION	10" CRUSHED (GRADED)	TENSAR TRIAX GEO-GRID	CEMENT STABILIZED SAND	EXCAVATION	EMBANKMENT
	CY	SY	CY	CY	CY
	14,500	35,985	436	3,880	1,646
TOTAL	14,500	35,985	436	3,880	1,646

EARTHWORK QUANTITIES CALCULATED FOR THE ENTIRE LENGTH OF PROJECT.

ISSUE FOR BID

FREESE AND NICHOLS, INC.
TEXAS REGISTERED ENGINEERING FIRM F-2144
STATE OF TEXAS
COURTNEY I CUNNINGHAM
141398
LICENSED PROFESSIONAL ENGINEER
04-11-2023

FREESE AND NICHOLS
801 Cherry Street, Suite 2800
Fort Worth, TX 76102
Phone - (817) 735-7300
Web - www.freese.com

SABINE RIVER AUTHORITY TOLEDO BEND FISHING TOURNAMENT SITE

ROADWAY AND DRAINAGE ENGINEERING DESIGN

SUMMARY OF QUANTITIES

NO.	ISSUES	BY	DATE

F&N JOB NO. OFF00000
DATE 00/00/00
DESIGNED
DRAWN
REVISED
CHECKED
FILE NAME SOQ.dgn

VERIFY SCALE Bar is one inch on original drawing. If not one inch on this sheet, adjust scale. 0 1

SHEET

SEQ.

Riner Engineering, Inc.
4641 Kennedy Commerce Drive, Houston, TX 77032
Telephone: 281-469-3347; Fax: 281-469.3594

BORING NUMBER B-01

CLIENT Freese and Nichols, Inc.
PROJECT NAME SRA Toledo Bend Fishing Tournament Site
PROJECT NUMBER 22-0769
PROJECT LOCATION Hemphill, Texas
DATE STARTED 11/14/22 **COMPLETED** 11/14/22
GROUND ELEVATION 308.877 ft **NORTHING** 10522252.27
CONTRACTOR RINER
GROUND WATER LEVELS: **EASTING** 4346159.554
METHOD Auger 0 - 10 feet
INITIALLY ENCOUNTERED Not Encountered
LOGGED BY J.C. **CHECKED BY** A.A.
AFTER 15 MIN. Not Measured
NOTES Survey data as provided by client in PNEZD format
AFTER ---

ELEVATION (ft)	DEPTH (ft)	GRAPHIC LOG	MATERIAL DESCRIPTION	SAMPLE TYPE NUMBER	RECOVERY % (RQD)	BLOW COUNTS (N VALUE)	POCKET PEN. (tsf)	TORVANE (tsf)	Compressive Strength (tsf)	Confining Pressure (psi)	DRY UNIT WT. (pcf)	MOISTURE CONTENT (%)	ATTERBERG LIMITS: LIQUID LIMIT	ATTERBERG LIMITS: PLASTIC LIMIT	ATTERBERG LIMITS: PLASTICITY INDEX	FINES CONTENT (%)
	0.0		PAVEMENT - 3-Inch BASE.													
307.5			FAT CLAY WITH SAND (CH) FILL - Soft, gray and brown.	ST			1.00	0.3				39	63	21	42	73
	2.5		SANDY LEAN CLAY (CL) - Hard, light brown and reddish brown, with sand pockets.	ST			4.50+	1.0				18				
305.0			SILTY SAND (SM) - Medium dense, light gray and light brown.													
	5.0			SS		10-13-15 (28)						14				36
302.5				SS		8-16-14 (30)						20				
	7.5															
300.0				SS		4-7-11 (18)										
	10.0															

Bottom of hole at 10.0 feet.

Riner Engineering, Inc.
4641 Kennedy Commerce Drive, Houston, TX 77032
Telephone: 281-469-3347; Fax: 281-469.3594

BORING NUMBER B-02

CLIENT Freese and Nichols, Inc.
PROJECT NAME SRA Toledo Bend Fishing Tournament Site
PROJECT NUMBER 22-0769
PROJECT LOCATION Hemphill, Texas
DATE STARTED 11/14/22 **COMPLETED** 11/14/22
GROUND ELEVATION 299.614 ft **NORTHING** 10522789.87
CONTRACTOR RINER
GROUND WATER LEVELS: **EASTING** 4346115.957
METHOD Auger 0 - 10 feet
INITIALLY ENCOUNTERED Not Encountered
LOGGED BY J.C. **CHECKED BY** A.A.
AFTER 15 MIN. Not Measured
NOTES Survey data as provided by client in PNEZD format
AFTER ---

ELEVATION (ft)	DEPTH (ft)	GRAPHIC LOG	MATERIAL DESCRIPTION	SAMPLE TYPE NUMBER	RECOVERY % (RQD)	BLOW COUNTS (N VALUE)	POCKET PEN. (tsf)	TORVANE (tsf)	Compressive Strength (tsf)	Confining Pressure (psi)	DRY UNIT WT. (pcf)	MOISTURE CONTENT (%)	ATTERBERG LIMITS: LIQUID LIMIT	ATTERBERG LIMITS: PLASTIC LIMIT	ATTERBERG LIMITS: PLASTICITY INDEX	FINES CONTENT (%)
	0.0		PAVEMENT - 2-Inch BASE.													
297.5			SANDY LEAN CLAY (CL) FILL - Hard, gray and brown.	ST			4.50+	2.0				16	41	19	22	64
	2.5		SANDY LEAN CLAY (CL) / LEAN CLAY WITH SAND (CL) - Firm to hard, light brown and reddish brown.	ST			4.50+	2.3								
295.0																
	5.0			ST			4.00	1.9				20				
292.5				ST			4.50+	1.8								
	7.5															
290.0				ST			1.50	0.5				18				
	10.0															

Bottom of hole at 10.0 feet.

NEW TEMPLATE W/T ELEVATION 22-0769.GPJ NEW GINT TEMP.GDT 3/22/23

FREESE AND NICHOLS, INC.
TEXAS REGISTERED ENGINEERING FIRM F-2144

STATE OF TEXAS
COURTNEY L CUNNINGHAM
141398
LICENSED PROFESSIONAL ENGINEER
04-11-2023

FREESE AND NICHOLS
801 Cherry Street, Suite 2800
Fort Worth, TX 76102
Phone - (817) 735-7300
Web - www.freese.com

SABINE RIVER AUTHORITY TOLEDO BEND FISHING TOURNAMENT SITE
ROADWAY AND DRAINAGE ENGINEERING DESIGN
BORING LOGS
B-01 AND B-02

F&N JOB NO. OFF00000
DATE 00/00/00
DESIGNED
DRAWN
REVISED
CHECKED
FILE NAME BORING01.dgn

NO. ISSUES BY DATE

VERIFY SCALE Bar is one inch on original drawing. If not one inch on this sheet, adjust scale.
0 1

SHEET
SEQ.

ISSUE FOR BID

MicroStation V8 User: freesepw11
(\\freesepw11\ics02\ICS_pdf_work_dir\3812\28156_6\BORING01.dgn
Plotter: CutPrint1 (\\freesepw11\ics02\ICS_pdf_work_dir\3812\28156_6\cutprint1.pltcfg)
Plot Scale: 1.000 ' / in.
Date: Apr. 03, 2023 - 10:58:30 PM
Model: Default
Project: Freese and Nichols, Inc.

Office: Date: Apr. 03, 2023 - 10:58:30 PM User: freesepw11 File: \\freesepw11\ics02\ICS_pdf_work_dir\3812\28156_6\BORING01.dgn

Riner Engineering, Inc.
4641 Kennedy Commerce Drive, Houston, TX 77032
Telephone: 281-469-3347; Fax: 281-469.3594

BORING NUMBER B-03

CLIENT Freese and Nichols, Inc.
PROJECT NAME SRA Toledo Bend Fishing Tournament Site
PROJECT NUMBER 22-0769
PROJECT LOCATION Hemphill, Texas
DATE STARTED 11/14/22 **COMPLETED** 11/14/22
GROUND ELEVATION 282.72 ft **NORTHING** 10523367.98
CONTRACTOR RINER
GROUND WATER LEVELS: **EASTING** 4346098.089
METHOD Auger 0 - 10 feet
INITIALLY ENCOUNTERED Not Encountered
LOGGED BY J.C. **CHECKED BY** A.A.
AFTER 15 MIN. Not Measured
NOTES Survey data as provided by client in PNEZD format
AFTER ---

ELEVATION (ft)	DEPTH (ft)	GRAPHIC LOG	MATERIAL DESCRIPTION	SAMPLE TYPE NUMBER	RECOVERY % (RQD)	BLOW COUNTS (N VALUE)	POCKET PEN. (tsf)	TORVANE (tsf)	Compressive Strength (tsf)	Confining Pressure (psi)	DRY UNIT WT. (pcf)	MOISTURE CONTENT (%)	ATTERBERG LIMITS: LIQUID LIMIT	ATTERBERG LIMITS: PLASTIC LIMIT	ATTERBERG LIMITS: PLASTICITY INDEX	FINES CONTENT (%)
282.5	0.0		PAVEMENT - 2-Inch BASE.													
			SANDY LEAN CLAY (CL) FILL - Stiff, gray and brown.	ST			2.50	1.0				17				
280.0	2.5		SANDY LEAN CLAY (CL) / LEAN CLAY WITH SAND (CL) - Stiff to very stiff, light brown and reddish brown.	ST			3.00	1.3				14	29	13	16	70
277.5	5.0			ST			4.00	1.8								
275.0	7.5		SANDY FAT CLAY (CH) / FAT CLAY WITH SAND (CH) - Very stiff, light brown and reddish brown.	ST			4.00	2.0				16				
	10.0			ST			4.00									

Bottom of hole at 10.0 feet.

Riner Engineering, Inc.
4641 Kennedy Commerce Drive, Houston, TX 77032
Telephone: 281-469-3347; Fax: 281-469.3594

BORING NUMBER B-04

CLIENT Freese and Nichols, Inc.
PROJECT NAME SRA Toledo Bend Fishing Tournament Site
PROJECT NUMBER 22-0769
PROJECT LOCATION Hemphill, Texas
DATE STARTED 11/14/22 **COMPLETED** 11/14/22
GROUND ELEVATION 281.105 ft **NORTHING** 10523775.75
CONTRACTOR RINER
GROUND WATER LEVELS: **EASTING** 4346073.41
METHOD Auger 0 - 10 feet
INITIALLY ENCOUNTERED Not Encountered
LOGGED BY J.C. **CHECKED BY** A.A.
AFTER 15 MIN. Not Measured
NOTES Survey data as provided by client in PNEZD format
AFTER ---

ELEVATION (ft)	DEPTH (ft)	GRAPHIC LOG	MATERIAL DESCRIPTION	SAMPLE TYPE NUMBER	RECOVERY % (RQD)	BLOW COUNTS (N VALUE)	POCKET PEN. (tsf)	TORVANE (tsf)	Compressive Strength (tsf)	Confining Pressure (psi)	DRY UNIT WT. (pcf)	MOISTURE CONTENT (%)	ATTERBERG LIMITS: LIQUID LIMIT	ATTERBERG LIMITS: PLASTIC LIMIT	ATTERBERG LIMITS: PLASTICITY INDEX	FINES CONTENT (%)
	0.0		PAVEMENT - 3-Inch BASE.													
280.0			SANDY LEAN CLAY (CL) FILL - Gray and brown.	AU								16	33	16	17	54
277.5	2.5		SANDY LEAN CLAY (CL) / LEAN CLAY WITH SAND (CL) - Hard, light brown and reddish brown.	ST			4.50+	1.4								
	5.0			ST			4.50+	1.8				18				
275.0	7.5		SANDY FAT CLAY (CH) / FAT CLAY WITH SAND (CH) - Very stiff to hard, light brown and reddish brown.	ST			4.50+	2.0								
272.5				ST			4.00	1.4				68				
	10.0															

Bottom of hole at 10.0 feet.

NEW TEMPLATE W/T ELEVATION 22-0769.GPJ NEW GINT TEMP GDT 3/22/23

FREESE AND NICHOLS, INC.
TEXAS REGISTERED ENGINEERING FIRM F-2144

STATE OF TEXAS
COURTNEY I. CUNNINGHAM
141398
LICENSED PROFESSIONAL ENGINEER
04-11-2023

FREESE AND NICHOLS
801 Cherry Street, Suite 2800
Fort Worth, TX 76102
Phone - (817) 735-7300
Web - www.freese.com

SABINE RIVER AUTHORITY TOLEDO BEND FISHING TOURNAMENT SITE
ROADWAY AND DRAINAGE ENGINEERING DESIGN

BORING LOGS
B-03 AND B-04

F&N JOB NO. OFF00000
DATE 00/00/00
DESIGNED
DRAWN
REVISED
CHECKED
FILE NAME BORING02.dgn

NO. | ISSUES | BY | DATE

VERIFY SCALE Bar is one inch on original drawing. If not one inch on this sheet, adjust scale.
0 1

SHEET
SEQ.

ISSUE FOR BID

MicroStation V8 User: freesepw11\jlas026
Office: freesepw11\ics02\CS_pdf_work_dir\3812\28156_7\BORING02.dgn
Plotter: C:\Program Files\Bentley\Common\Plotters\pdf.pltr
Plot Scale: 1.000 / 1 In.
Date: Apr. 03, 2023 - 10:58:30 PM
Model: Default
Project: Freese and Nichols, Inc.

Office: Date: Apr. 03, 2023 - 10:58:30 PM User: freesepw11\jlas026 freesepw11\ics02\CS_pdf_work_dir\3812\28156_7\BORING02.dgn

Riner Engineering, Inc.
4641 Kennedy Commerce Drive, Houston, TX 77032
Telephone: 281-469-3347; Fax: 281-469.3594

BORING NUMBER B-05

CLIENT Freese and Nichols, Inc.
PROJECT NAME SRA Toledo Bend Fishing Tournament Site
PROJECT NUMBER 22-0769
PROJECT LOCATION Hemphill, Texas
DATE STARTED 11/14/22 **COMPLETED** 11/14/22
GROUND ELEVATION 286.382 ft **NORTHING** 10524253.88
CONTRACTOR RINER
GROUND WATER LEVELS: **EASTING** 4346225.173
METHOD Auger 0 - 10 feet
INITIALLY ENCOUNTERED Not Encountered
LOGGED BY J.C. **CHECKED BY** A.A.
AFTER 15 MIN. Not Measured
NOTES Survey data as provided by client in PNEZD format
AFTER ---

ELEVATION (ft)	DEPTH (ft)	GRAPHIC LOG	MATERIAL DESCRIPTION	SAMPLE TYPE NUMBER	RECOVERY % (RQD)	BLOW COUNTS (N VALUE)	POCKET PEN. (tsf)	TORVANE (tsf)	Compressive Strength (tsf)	Confining Pressure (psi)	DRY UNIT WT. (pcf)	MOISTURE CONTENT (%)	ATTERBERG LIMITS: LIQUID LIMIT	ATTERBERG LIMITS: PLASTIC LIMIT	ATTERBERG LIMITS: PLASTICITY INDEX	FINES CONTENT (%)
	0.0		PAVEMENT - 2-Inch BASE.													
285.0			FAT CLAY WITH SAND (CH) FILL - Hard, gray and brown.	ST			4.50+	1.9				34	81	19	62	72
282.5	2.5		SANDY FAT CLAY (CH) / FAT CLAY WITH SAND (CH) - Very stiff to hard, light brown and reddish brown.	ST			4.00	1.8				40				
280.0	5.0			ST			4.50+	2.0								
277.5	7.5			ST			4.00	1.9				30				
	10.0			ST			4.50+	1.9								

Bottom of hole at 10.0 feet.

Riner Engineering, Inc.
4641 Kennedy Commerce Drive, Houston, TX 77032
Telephone: 281-469-3347; Fax: 281-469.3594

BORING NUMBER B-06

CLIENT Freese and Nichols, Inc.
PROJECT NAME SRA Toledo Bend Fishing Tournament Site
PROJECT NUMBER 22-0769
PROJECT LOCATION Hemphill, Texas
DATE STARTED 11/14/22 **COMPLETED** 11/14/22
GROUND ELEVATION 281.517 ft **NORTHING** 10524729.77
CONTRACTOR RINER
GROUND WATER LEVELS: **EASTING** 4346441.704
METHOD Auger 0 - 10 feet
INITIALLY ENCOUNTERED Not Encountered
LOGGED BY J.C. **CHECKED BY** A.A.
AFTER 15 MIN. Not Measured
NOTES Survey data as provided by client in PNEZD format
AFTER ---

ELEVATION (ft)	DEPTH (ft)	GRAPHIC LOG	MATERIAL DESCRIPTION	SAMPLE TYPE NUMBER	RECOVERY % (RQD)	BLOW COUNTS (N VALUE)	POCKET PEN. (tsf)	TORVANE (tsf)	Compressive Strength (tsf)	Confining Pressure (psi)	DRY UNIT WT. (pcf)	MOISTURE CONTENT (%)	ATTERBERG LIMITS: LIQUID LIMIT	ATTERBERG LIMITS: PLASTIC LIMIT	ATTERBERG LIMITS: PLASTICITY INDEX	FINES CONTENT (%)
	0.0		PAVEMENT - 2-Inch BASE.													
280.0			CLAYEY SAND (SC) FILL - Very stiff, gray and reddish brown.	ST			4.00					18	42	15	27	38
277.5	2.5		SANDY FAT CLAY (CH) / FAT CLAY WITH SAND (CH) - Soft to very stiff, light brown and reddish brown.	ST			4.00									
275.0	5.0			ST			1.00	0.3				31				
272.5	7.5			ST			1.00	0.3								
	10.0			ST			1.50	0.5				40				

Bottom of hole at 10.0 feet.

NEW TEMPLATE W/T ELEVATION 22-0769.GPJ NEW GINT TEMP.GDT 3/22/23

ISSUE FOR BID

FREESE AND NICHOLS, INC.
TEXAS REGISTERED ENGINEERING FIRM F-2144

STATE OF TEXAS
COURTNEY I. CUNNINGHAM
141398
LICENSED PROFESSIONAL ENGINEER
04-11-2023

FREESE AND NICHOLS
801 Cherry Street, Suite 2800
Fort Worth, TX 76102
Phone - (817) 735-7300
Web - www.freese.com

SABINE RIVER AUTHORITY TOLEDO BEND FISHING TOURNAMENT SITE
ROADWAY AND DRAINAGE ENGINEERING DESIGN

BORING LOGS
B-05 AND B-06

F&N JOB NO. OFF00000
DATE 00/00/00
DESIGNED
DRAWN
REVISED
CHECKED
FILE NAME BORING03.dgn

NO. | ISSUES | BY | DATE

VERIFY SCALE 0" 1"
Bar is one inch on original drawing.
If not one inch on this sheet, adjust scale.

SHEET
SEQ.

MicroStation V8 User: freesepw11
Office: freesepw11\cs02\ICS_pdf_work_dir\3812\28156_8\BORING03.dgn
Plotter: C:\Program Files\PDFCompressor\PDFCompressor.pdf
Plot Scale: 1.000 " / in.
Date: Apr. 03, 2023 - 10:58:52 PM
Model: Default
Project: Freese and Nichols Inc.

Office: Date: Apr. 03, 2023 - 10:58:52 PM User: freesepw11 File: C:\Program Files\Bentley\Office\freesepw11\cs02\ICS_pdf_work_dir\3812\28156_8\BORING03.dgn

Riner Engineering, Inc.
4641 Kennedy Commerce Drive, Houston, TX 77032
Telephone: 281-469-3347; Fax: 281-469.3594

BORING NUMBER B-07

CLIENT Freese and Nichols, Inc.
PROJECT NAME SRA Toledo Bend Fishing Tournament Site
PROJECT NUMBER 22-0769
PROJECT LOCATION Hemphill, Texas
DATE STARTED 11/14/22 **COMPLETED** 11/14/22
GROUND ELEVATION 292.452 ft **NORTHING** 10525180.94
CONTRACTOR RINER
GROUND WATER LEVELS: **EASTING** 4346678.622
METHOD Auger 0 - 10 feet
INITIALLY ENCOUNTERED Not Encountered
LOGGED BY J.C. **CHECKED BY** A.A.
AFTER 15 MIN. Not Measured
NOTES Survey data as provided by client in PNEZD format
AFTER ---

ELEVATION (ft)	DEPTH (ft)	GRAPHIC LOG	MATERIAL DESCRIPTION	SAMPLE TYPE NUMBER	RECOVERY % (RQD)	BLOW COUNTS (N VALUE)	POCKET PEN. (tsf)	TORVANE (tsf)	Compressive Strength (tsf)	Confining Pressure (psi)	DRY UNIT WT. (pcf)	MOISTURE CONTENT (%)	ATTERBERG LIMITS: LIQUID LIMIT	ATTERBERG LIMITS: PLASTIC LIMIT	ATTERBERG LIMITS: PLASTICITY INDEX	FINES CONTENT (%)
	0.0		PAVEMENT - 2-Inch BASE.													
			CLAYEY SAND (SC) FILL - Very stiff, gray and brown.	ST			4.00					16	36	18	18	49
290.0	2.5		SANDY FAT CLAY (CH) / FAT CLAY WITH SAND (CH) - Hard, light brown and reddish brown.	ST			4.50+	2.1				21				
287.5	5.0			ST			4.50+	2.1								
285.0	7.5			ST			4.50+	2.0				21				
282.5	10.0			ST			4.50+	2.1								

Bottom of hole at 10.0 feet.

Riner Engineering, Inc.
4641 Kennedy Commerce Drive, Houston, TX 77032
Telephone: 281-469-3347; Fax: 281-469.3594

BORING NUMBER B-08

CLIENT Freese and Nichols, Inc.
PROJECT NAME SRA Toledo Bend Fishing Tournament Site
PROJECT NUMBER 22-0769
PROJECT LOCATION Hemphill, Texas
DATE STARTED 11/14/22 **COMPLETED** 11/14/22
GROUND ELEVATION 276.286 ft **NORTHING** 10525645.82
CONTRACTOR RINER
GROUND WATER LEVELS: **EASTING** 4346889.559
METHOD Auger 0 - 10 feet
INITIALLY ENCOUNTERED Not Encountered
LOGGED BY J.C. **CHECKED BY** A.A.
AFTER 15 MIN. Not Measured
NOTES Survey data as provided by client in PNEZD format
AFTER ---

ELEVATION (ft)	DEPTH (ft)	GRAPHIC LOG	MATERIAL DESCRIPTION	SAMPLE TYPE NUMBER	RECOVERY % (RQD)	BLOW COUNTS (N VALUE)	POCKET PEN. (tsf)	TORVANE (tsf)	Compressive Strength (tsf)	Confining Pressure (psi)	DRY UNIT WT. (pcf)	MOISTURE CONTENT (%)	ATTERBERG LIMITS: LIQUID LIMIT	ATTERBERG LIMITS: PLASTIC LIMIT	ATTERBERG LIMITS: PLASTICITY INDEX	FINES CONTENT (%)
	0.0		PAVEMENT - 2-Inch BASE.													
275.0			SANDY LEAN CLAY (CL) FILL - Gray and brown.	AU								12	30	11	19	60
272.5	2.5		SANDY FAT CLAY (CH) / FAT CLAY WITH SAND (CH) - Hard, light brown and reddish brown.	ST			4.50+	2.3								
270.0	5.0			ST			4.50+	2.4				20				
267.5	7.5			ST			4.50+	2.4								
	10.0			ST			4.50+	2.3				24				

Bottom of hole at 10.0 feet.

FREESE AND NICHOLS, INC.
TEXAS REGISTERED ENGINEERING FIRM F-2144

STATE OF TEXAS
COURTNEY L CUNNINGHAM
141398
LICENSED PROFESSIONAL ENGINEER
04-11-2023

FREESE AND NICHOLS
801 Cherry Street, Suite 2800
Fort Worth, TX 76102
Phone: (817) 735-7300
Web - www.freese.com

SABINE RIVER AUTHORITY TOLEDO BEND FISHING TOURNAMENT SITE
ROADWAY AND DRAINAGE ENGINEERING DESIGN

BORING LOGS
B-07 AND B-08

NO.	ISSUES	BY	DATE

F&N JOB NO. OFF00000
DATE 00/00/00
DESIGNED
DRAWN
REVISED
CHECKED
FILE NAME BORING04.dgn

VERIFY SCALE Bar is one inch on original drawing. If not one inch on this sheet, adjust scale.
0 1

SHEET
SEQ.

ISSUE FOR BID

NEW TEMPLATE W/T ELEVATION 22-0769.GPJ NEW GINT TEMP.GDT 3/22/23

MicroStation V8 User: freesepw11lcs02 Office: freesepw11lcs02\CS_pdf_work_dir\3812\28156_9\BORING04.dgn
Plotter: C:\Program Files\Bentley\Common\Plotters\PDF Printer.pltr Date: Apr. 03, 2023 - 10:58:54 PM Model: Default
Plot Scale: 1.000 ' / in. Project: Freese and Nichols Inc.

Office: Date: Apr. 03, 2023 - 10:58:54 PM User: freesepw11lcs02 File: freesepw11lcs02\CS_pdf_work_dir\3812\28156_9\BORING04.dgn

Riner Engineering, Inc.
4641 Kennedy Commerce Drive, Houston, TX 77032
Telephone: 281-469-3347; Fax: 281-469.3594

BORING NUMBER B-09

CLIENT Freese and Nichols, Inc.
PROJECT NAME SRA Toledo Bend Fishing Tournament Site
PROJECT NUMBER 22-0769
PROJECT LOCATION Hemphill, Texas
DATE STARTED 11/14/22 **COMPLETED** 11/14/22
GROUND ELEVATION 274.878 ft **NORTHING** 10526069.23
CONTRACTOR RINER
GROUND WATER LEVELS: **EASTING** 4347112.711
METHOD Auger 0 - 10 feet
INITIALLY ENCOUNTERED Not Encountered
LOGGED BY J.C. **CHECKED BY** A.A.
AFTER 15 MIN. Not Measured
NOTES Survey data as provided by client in PNEZD format
AFTER ---

ELEVATION (ft)	DEPTH (ft)	GRAPHIC LOG	MATERIAL DESCRIPTION	SAMPLE TYPE NUMBER	RECOVERY % (RQD)	BLOW COUNTS (N VALUE)	POCKET PEN. (tsf)	TORVANE (tsf)	Compressive Strength (tsf)	Confining Pressure (psi)	DRY UNIT WT. (pcf)	MOISTURE CONTENT (%)	ATTERBERG LIMITS: LIQUID LIMIT	ATTERBERG LIMITS: PLASTIC LIMIT	ATTERBERG LIMITS: PLASTICITY INDEX	FINES CONTENT (%)
	0.0		PAVEMENT - 2-Inch BASE.													
			FAT CLAY WITH SAND (CH) FILL - Very stiff, gray and brown.	ST			4.00	1.5				32	97	23	74	84
272.5	2.5		SANDY FAT CLAY (CH) / FAT CLAY WITH SAND (CH) - Very stiff to hard, light brown and reddish brown.	ST			4.50+	1.9								
270.0	5.0			ST			4.50+	1.9								
267.5	7.5			ST			4.50+	1.8				24				
265.0	10.0			ST			4.00	1.6								

Bottom of hole at 10.0 feet.

Riner Engineering, Inc.
4641 Kennedy Commerce Drive, Houston, TX 77032
Telephone: 281-469-3347; Fax: 281-469.3594

BORING NUMBER B-10

CLIENT Freese and Nichols, Inc.
PROJECT NAME SRA Toledo Bend Fishing Tournament Site
PROJECT NUMBER 22-0769
PROJECT LOCATION Hemphill, Texas
DATE STARTED 11/14/22 **COMPLETED** 11/14/22
GROUND ELEVATION 270.28 ft **NORTHING** 10526555.57
CONTRACTOR RINER
GROUND WATER LEVELS: **EASTING** 4347333.427
METHOD Auger 0 - 10 feet
INITIALLY ENCOUNTERED Not Encountered
LOGGED BY J.C. **CHECKED BY** A.A.
AFTER 15 MIN. Not Measured
NOTES Survey data as provided by client in PNEZD format
AFTER ---

ELEVATION (ft)	DEPTH (ft)	GRAPHIC LOG	MATERIAL DESCRIPTION	SAMPLE TYPE NUMBER	RECOVERY % (RQD)	BLOW COUNTS (N VALUE)	POCKET PEN. (tsf)	TORVANE (tsf)	Compressive Strength (tsf)	Confining Pressure (psi)	DRY UNIT WT. (pcf)	MOISTURE CONTENT (%)	ATTERBERG LIMITS: LIQUID LIMIT	ATTERBERG LIMITS: PLASTIC LIMIT	ATTERBERG LIMITS: PLASTICITY INDEX	FINES CONTENT (%)
270.0	0.0		PAVEMENT - 2-Inch BASE.													
			FAT CLAY WITH SAND (CH) FILL - Hard, gray and brown.	ST			4.50+	2.0				14				
267.5	2.5		SANDY FAT CLAY (CH) / FAT CLAY WITH SAND (CH) - Stiff, light brown and reddish brown.	ST			3.00	1.1				23	57	20	37	75
265.0	5.0			ST			2.50	1.0				23				
262.5	7.5			ST			2.50	0.8								
	10.0			ST			3.00	0.8				14				

Bottom of hole at 10.0 feet.

NEW TEMPLATE W/T ELEVATION 22-0769.GPJ NEW GINT TEMP.GDT 3/22/23

FREESE AND NICHOLS, INC.
TEXAS REGISTERED ENGINEERING FIRM F-2144

STATE OF TEXAS
COURTNEY I CUNNINGHAM
141398
LICENSED PROFESSIONAL ENGINEER
04-11-2023

FREESE AND NICHOLS
801 Cherry Street, Suite 2800
Fort Worth, TX 76102
Phone - (817) 735-7300
Web - www.freese.com

SABINE RIVER AUTHORITY TOLEDO BEND FISHING TOURNAMENT SITE
ROADWAY AND DRAINAGE ENGINEERING DESIGN
BORING LOGS
B-09 AND B-10

F&N JOB NO. OFF00000
DATE 00/00/00
DESIGNED
DRAWN
REVISED
CHECKED
FILE NAME BORING05.dgn

NO. | ISSUES | BY | DATE

VERIFY SCALE 0" 1"
Bar is one inch on original drawing.
If not one inch on this sheet, adjust scale.

SHEET
SEQ.

ISSUE FOR BID

MicroStation V8 User: freesepw11\ics02\ICS_pdf_work_dir\3812\28156_10\BORING05.dgn
Office: freesepw11\ics02\ICS_pdf_work_dir\3812\28156_10\BORING05.dgn
Plotter: C:\Program Files\bentley\Connect Edition\Plotters\pdf.pltr
Plot Scale: 1.000 ' / in.
Date: Apr. 03, 2023 - 10:58:58 PM
Model: Default
Project: Freese and Nichols, Inc.

Office: Date: Apr. 03, 2023 - 10:58:58 PM User: freesepw11\ics02\ICS_pdf_work_dir\3812\28156_10\BORING05.dgn

Riner Engineering, Inc.
4641 Kennedy Commerce Drive, Houston, TX 77032
Telephone: 281-469-3347; Fax: 281-469.3594

BORING NUMBER B-11

PAGE 1 OF 1

CLIENT Freese and Nichols, Inc.
PROJECT NAME SRA Toledo Bend Fishing Tournament Site
PROJECT NUMBER 22-0769
PROJECT LOCATION Hemphill, Texas
DATE STARTED 11/14/22 **COMPLETED** 11/14/22
GROUND ELEVATION 265.445 ft **NORTHING** 10526983.63
CONTRACTOR RINER
GROUND WATER LEVELS: **EASTING** 4347556.055
METHOD Auger 0 - 10 feet
INITIALLY ENCOUNTERED Not Encountered
LOGGED BY J.C. **CHECKED BY** A.A.
AFTER 15 MIN. Not Measured
NOTES Survey data as provided by client in PNEZD format
AFTER ---

ELEVATION (ft)	DEPTH (ft)	GRAPHIC LOG	MATERIAL DESCRIPTION	SAMPLE TYPE NUMBER	RECOVERY % (RQD)	BLOW COUNTS (N VALUE)	POCKET PEN. (tsf)	TORVANE (tsf)	Compressive Strength (tsf)	Confining Pressure (psi)	DRY UNIT WT. (pcf)	MOISTURE CONTENT (%)	ATTERBERG LIMITS: LIQUID LIMIT	ATTERBERG LIMITS: PLASTIC LIMIT	ATTERBERG LIMITS: PLASTICITY INDEX	FINES CONTENT (%)
	0.0		PAVEMENT - 2-Inch BASE.													
265.0			SANDY FAT CLAY (CH) FILL - Stiff, gray and brown.	ST			2.00	1.0				34	71	21	50	68
	2.5		FAT CLAY (CH) / FAT CLAY WITH SAND (CH) - Firm to stiff, light brown and reddish brown.													
262.5				ST			2.00	0.8								
	5.0			ST			2.00	0.8								
260.0																
	7.5			ST			2.00	0.8				28				
257.5																
	10.0			ST			1.50	0.8								

Bottom of hole at 10.0 feet.

Riner Engineering, Inc.
4641 Kennedy Commerce Drive, Houston, TX 77032
Telephone: 281-469-3347; Fax: 281-469.3594

BORING NUMBER B-12

PAGE 1 OF 1

CLIENT Freese and Nichols, Inc.
PROJECT NAME SRA Toledo Bend Fishing Tournament Site
PROJECT NUMBER 22-0769
PROJECT LOCATION Hemphill, Texas
DATE STARTED 11/14/22 **COMPLETED** 11/14/22
GROUND ELEVATION 255.63 ft **NORTHING** 10527433.12
CONTRACTOR RINER
GROUND WATER LEVELS: **EASTING** 4347759.977
METHOD Auger 0 - 10 feet
INITIALLY ENCOUNTERED Not Encountered
LOGGED BY J.C. **CHECKED BY** A.A.
AFTER 15 MIN. Not Measured
NOTES Survey data as provided by client in PNEZD format
AFTER ---

ELEVATION (ft)	DEPTH (ft)	GRAPHIC LOG	MATERIAL DESCRIPTION	SAMPLE TYPE NUMBER	RECOVERY % (RQD)	BLOW COUNTS (N VALUE)	POCKET PEN. (tsf)	TORVANE (tsf)	Compressive Strength (tsf)	Confining Pressure (psi)	DRY UNIT WT. (pcf)	MOISTURE CONTENT (%)	ATTERBERG LIMITS: LIQUID LIMIT	ATTERBERG LIMITS: PLASTIC LIMIT	ATTERBERG LIMITS: PLASTICITY INDEX	FINES CONTENT (%)
	0.0		PAVEMENT - 2-Inch BASE.													
255.0			FAT CLAY WITH SAND (CH) FILL - Stiff, gray and brown.	ST			2.00	1.0				25				
	2.5		FAT CLAY (CH) / FAT CLAY WITH SAND (CH) - Firm to stiff, light brown and reddish brown.													
252.5				ST			2.50	1.0				27	71	21	50	88
	5.0			ST			1.50	0.5				29				
250.0																
	7.5			ST			3.00	1.3				41	93	21	72	94
247.5																
	10.0			ST			3.00	1.3								

Bottom of hole at 10.0 feet.

NEW TEMPLATE W/T ELEVATION 22-0769.GPJ NEW GINT TEMP.GDT 3/22/23

ISSUE FOR BID

FREESE AND NICHOLS, INC.
TEXAS REGISTERED ENGINEERING FIRM F-2144

STATE OF TEXAS
COURTNEY I. CUNNINGHAM
141398
LICENSED PROFESSIONAL ENGINEER
04-11-2023

FREESE AND NICHOLS
801 Cherry Street, Suite 2800
Fort Worth, TX 76102
Phone: (817) 735-7300
Web - www.freese.com

SABINE RIVER AUTHORITY TOLEDO BEND FISHING TOURNAMENT SITE
ROADWAY AND DRAINAGE ENGINEERING DESIGN

BORING LOGS
B-11 AND B-12

F&N JOB NO. OFF00000
DATE 00/00/00
DESIGNED
DRAWN
REVISED
CHECKED
FILE NAME BORING06.dgn

NO. | ISSUES | BY | DATE

VERIFY SCALE 0" Bar is one inch on original drawing. If not one inch on this sheet, adjust scale.

SHEET
SEQ.

MicroStation V8 User: freesepw11\ics02 Office:
Plotter: C:\Program Files\WPCorp\Corel WordPerfect Office 11\Drivers\pdf
Plot Scale: 1.000 ' / in.
Date: Apr. 03, 2023 - 10:59:07 PM
Project: Freese and Nichols Inc.

Office: Date: Apr. 03, 2023 - 10:59:07 PM User: freesepw11\ics02 File: freesepw11\ics02\ICS_pdf_work_dir\3812\28156_11\BORING06.dgn

Riner Engineering, Inc.
4641 Kennedy Commerce Drive, Houston, TX 77032
Telephone: 281-469-3347; Fax: 281-469.3594

BORING NUMBER B-13

CLIENT Freese and Nichols, Inc.
PROJECT NAME SRA Toledo Bend Fishing Tournament Site
PROJECT NUMBER 22-0769
PROJECT LOCATION Hemphill, Texas
DATE STARTED 11/14/22 **COMPLETED** 11/14/22
GROUND ELEVATION 248.926 ft **NORTHING** 10527887.48
CONTRACTOR RINER
GROUND WATER LEVELS: **EASTING** 4347995.405
METHOD Auger 0 - 10 feet
INITIALLY ENCOUNTERED Not Encountered
LOGGED BY J.C. **CHECKED BY** A.A.
AFTER 15 MIN. Not Measured
NOTES Survey data as provided by client in PNEZD format
AFTER ---

ELEVATION (ft)	DEPTH (ft)	GRAPHIC LOG	MATERIAL DESCRIPTION	SAMPLE TYPE NUMBER	RECOVERY % (RQD)	BLOW COUNTS (N VALUE)	POCKET PEN. (tsf)	TORVANE (tsf)	Compressive Strength (tsf)	Confining Pressure (psi)	DRY UNIT WT. (pcf)	MOISTURE CONTENT (%)	ATTERBERG LIMITS: LIQUID LIMIT	ATTERBERG LIMITS: PLASTIC LIMIT	ATTERBERG LIMITS: PLASTICITY INDEX	FINES CONTENT (%)
	0.0		PAVEMENT - 2-Inch BASE.													
247.5			FAT CLAY WITH SAND (CH) FILL - Hard, gray and brown.	ST			4.50+	1.9				21	55	22	33	77
	2.5		FAT CLAY WITH SAND (CH) - Hard, light brown and reddish brown.	ST			4.50+	2.0				23				
245.0			SANDY LEAN CLAY (CL) - Very stiff to hard, light brown and reddish brown, with sand pockets.													
	5.0			ST			4.50+	2.0								
242.5				ST			4.50+	2.4				17				
	7.5															
240.0				ST			4.00									
	10.0															

Bottom of hole at 10.0 feet.

Riner Engineering, Inc.
4641 Kennedy Commerce Drive, Houston, TX 77032
Telephone: 281-469-3347; Fax: 281-469.3594

BORING NUMBER B-14

CLIENT Freese and Nichols, Inc.
PROJECT NAME SRA Toledo Bend Fishing Tournament Site
PROJECT NUMBER 22-0769
PROJECT LOCATION Hemphill, Texas
DATE STARTED 11/14/22 **COMPLETED** 11/14/22
GROUND ELEVATION 248.239 ft **NORTHING** 10528365.92
CONTRACTOR RINER
GROUND WATER LEVELS: **EASTING** 4348208.03
METHOD Auger 0 - 10 feet
INITIALLY ENCOUNTERED Not Encountered
LOGGED BY J.C. **CHECKED BY** A.A.
AFTER 15 MIN. Not Measured
NOTES Survey data as provided by client in PNEZD format
AFTER ---

ELEVATION (ft)	DEPTH (ft)	GRAPHIC LOG	MATERIAL DESCRIPTION	SAMPLE TYPE NUMBER	RECOVERY % (RQD)	BLOW COUNTS (N VALUE)	POCKET PEN. (tsf)	TORVANE (tsf)	Compressive Strength (tsf)	Confining Pressure (psi)	DRY UNIT WT. (pcf)	MOISTURE CONTENT (%)	ATTERBERG LIMITS: LIQUID LIMIT	ATTERBERG LIMITS: PLASTIC LIMIT	ATTERBERG LIMITS: PLASTICITY INDEX	FINES CONTENT (%)
	0.0		PAVEMENT - 2-Inch BASE.													
247.5			SILTY, CLAYEY SAND (SC-SM) FILL - Light brown.	AU								5				21
	2.5		SANDY FAT CLAY (CH) / FAT CLAY WITH SAND (CH) - Very stiff to hard, light brown and reddish brown.	ST			4.50+	2.4								
245.0																
	5.0			ST			4.50+	2.4				21				
242.5																
	7.5			ST			4.50+	2.0								
240.0																
	10.0			ST			4.00	1.6				22				

Bottom of hole at 10.0 feet.

ISSUE FOR BID

FREESE AND NICHOLS, INC.
TEXAS REGISTERED ENGINEERING FIRM F-2144

STATE OF TEXAS
COURTNEY I. CUNNINGHAM
141398
LICENSED PROFESSIONAL ENGINEER
04-11-2023

FREESE AND NICHOLS
801 Cherry Street, Suite 2800
Fort Worth, TX 76102
Phone - (817) 735-7300
Web - www.freese.com

SABINE RIVER AUTHORITY TOLEDO BEND FISHING TOURNAMENT SITE
ROADWAY AND DRAINAGE ENGINEERING DESIGN
BORING LOGS
B-13 AND B-14

F&N JOB NO. OFF00000
DATE 00/00/00
DESIGNED
DRAWN
REVISED
CHECKED
FILE NAME BORING07.dgn

NO.	ISSUES	BY	DATE

VERIFY SCALE 0 1
Bar is one inch on original drawing.
If not one inch on this sheet, adjust scale.

SHEET
SEQ.

MicroStation V8 User: freesepw11\cs02 Office:
Plotter: C:\Program Files\PDF Converter\Bullzip PDF Printer.pdf Driver: Microsoft Windows-PS
Plot Scale: 1.000 ' / in. Model: Default
Date: Apr. 03, 2023 - 10:59:13 PM Project: Freese and Nichols, Inc.

Office: Date: Apr. 03, 2023 - 10:59:13 PM User: freesepw11\cs02 File: C:\Program Files\Bentley\Workspace\projects\freesepw11\cs02\ICS_pdf_work_dir\3812\28156_12\BORING07.dgn

NEW TEMPLATE W/T ELEVATION 22-0769.GPJ NEW GINT TEMP.GDT 3/22/23

Riner Engineering, Inc.
4641 Kennedy Commerce Drive, Houston, TX 77032
Telephone: 281-469-3347; Fax: 281-469.3594

BORING NUMBER B-15

CLIENT Freese and Nichols, Inc.
PROJECT NAME SRA Toledo Bend Fishing Tournament Site
PROJECT NUMBER 22-0769
PROJECT LOCATION Hemphill, Texas
DATE STARTED 11/14/22 **COMPLETED** 11/14/22
GROUND ELEVATION 252.112 ft **NORTHING** 10528795.85
CONTRACTOR RINER
GROUND WATER LEVELS: **EASTING** 4348472.209
METHOD Auger 0 - 10 feet
INITIALLY ENCOUNTERED Not Encountered
LOGGED BY J.C. **CHECKED BY** A.A.
AFTER 15 MIN. Not Measured
NOTES Survey data as provided by client in PNEZD format
AFTER ---

ELEVATION (ft)	DEPTH (ft)	GRAPHIC LOG	MATERIAL DESCRIPTION	SAMPLE TYPE NUMBER	RECOVERY % (RQD)	BLOW COUNTS (N VALUE)	POCKET PEN. (tsf)	TORVANE (tsf)	Compressive Strength (tsf)	Confining Pressure (psi)	DRY UNIT WT. (pcf)	MOISTURE CONTENT (%)	ATTERBERG LIMITS: LIQUID LIMIT	ATTERBERG LIMITS: PLASTIC LIMIT	ATTERBERG LIMITS: PLASTICITY INDEX	FINES CONTENT (%)
	0.0		PAVEMENT - 2-Inch BASE.													
			LEAN CLAY WITH SAND (CL) FILL - Hard, light brown and reddish brown.	ST			4.50+	2.4				19	49	23	26	79
250.0	2.5		FAT CLAY WITH SAND (CH) - Hard, light brown and reddish brown.	ST			4.50+	2.1				21				
247.5	5.0		SANDY LEAN CLAY (CL) - Soft to hard, light brown and reddish brown.	ST			4.50+	1.9								
245.0	7.5			ST			1.00					19				
242.5	10.0			ST			4.50+	0.8								

Bottom of hole at 10.0 feet.

Riner Engineering, Inc.
4641 Kennedy Commerce Drive, Houston, TX 77032
Telephone: 281-469-3347; Fax: 281-469.3594

BORING NUMBER B-16

CLIENT Freese and Nichols, Inc.
PROJECT NAME SRA Toledo Bend Fishing Tournament Site
PROJECT NUMBER 22-0769
PROJECT LOCATION Hemphill, Texas
DATE STARTED 11/14/22 **COMPLETED** 11/14/22
GROUND ELEVATION 260.243 ft **NORTHING** 10529152.92
CONTRACTOR RINER
GROUND WATER LEVELS: **EASTING** 4348754.327
METHOD Auger 0 - 10 feet
INITIALLY ENCOUNTERED Not Encountered
LOGGED BY J.C. **CHECKED BY** A.A.
AFTER 15 MIN. Not Measured
NOTES Survey data as provided by client in PNEZD format
AFTER ---

ELEVATION (ft)	DEPTH (ft)	GRAPHIC LOG	MATERIAL DESCRIPTION	SAMPLE TYPE NUMBER	RECOVERY % (RQD)	BLOW COUNTS (N VALUE)	POCKET PEN. (tsf)	TORVANE (tsf)	Compressive Strength (tsf)	Confining Pressure (psi)	DRY UNIT WT. (pcf)	MOISTURE CONTENT (%)	ATTERBERG LIMITS: LIQUID LIMIT	ATTERBERG LIMITS: PLASTIC LIMIT	ATTERBERG LIMITS: PLASTICITY INDEX	FINES CONTENT (%)
260.0	0.0		PAVEMENT - 2-Inch BASE.													
			FAT CLAY (CH) FILL - Gray and brown.	AU								20	73	21	52	87
257.5	2.5		SANDY FAT CLAY (CH) / FAT CLAY WITH SAND (CH) - Very stiff to hard, light brown and reddish brown.	ST			4.50+	2.4								
255.0	5.0			ST			4.50+	2.4				23				
252.5	7.5			ST			4.50+	2.4								
	10.0			ST			4.00	1.0				23				

Bottom of hole at 10.0 feet.

ISSUE FOR BID

FREESE AND NICHOLS, INC.
TEXAS REGISTERED ENGINEERING FIRM F-2144

STATE OF TEXAS
COURTNEY I. CUNNINGHAM
141398
LICENSED PROFESSIONAL ENGINEER
04-11-2023

FREESE AND NICHOLS
801 Cherry Street, Suite 2800
Fort Worth, TX 76102
Phone - (817) 735-7300
Web - www.freese.com

SABINE RIVER AUTHORITY TOLEDO BEND FISHING TOURNAMENT SITE
ROADWAY AND DRAINAGE ENGINEERING DESIGN
BORING LOGS
B-15 AND B-16

F&N JOB NO. OFF00000
DATE 00/00/00
DESIGNED
DRAWN
REVISED
CHECKED
FILE NAME BORING08.dgn

NO.	ISSUES	BY	DATE

VERIFY SCALE 0 1
Bar is one inch on original drawing.
If not one inch on this sheet, adjust scale.

SHEET
SEQ.

MicroStation V8 User: freesepw11\cs02 Office:
Plotter: C:\Program Files\PDFCreator\ Device:PDFCreator
Plot Scale: 1.000 ' / in.
Date: Apr. 03, 2023 - 10:59:23 PM
Model: Default
Project: Freese and Nichols Inc.

Office: Date: Apr. 03, 2023 - 10:59:23 PM User: freesepw11\cs02 File: C:\Users\freesepw11\cs02\ICS_pdf_work_dir\3812\28156_13\BORING08.dgn

Riner Engineering, Inc.
4641 Kennedy Commerce Drive, Houston, TX 77032
Telephone: 281-469-3347; Fax: 281-469.3594

BORING NUMBER B-17

CLIENT Freese and Nichols, Inc.
PROJECT NAME SRA Toledo Bend Fishing Tournament Site
PROJECT NUMBER 22-0769
PROJECT LOCATION Hemphill, Texas
DATE STARTED 11/15/22 **COMPLETED** 11/15/22
GROUND ELEVATION 265.845 ft **NORTHING** 10529544.89
CONTRACTOR RINER
GROUND WATER LEVELS: **EASTING** 4349104.017
METHOD Auger 0 - 10 feet
INITIALLY ENCOUNTERED Not Encountered
LOGGED BY J.C. **CHECKED BY** A.A.
AFTER 15 MIN. Not Measured
NOTES Survey data as provided by client in PNEZD format
AFTER ---

ELEVATION (ft)	DEPTH (ft)	GRAPHIC LOG	MATERIAL DESCRIPTION	SAMPLE TYPE NUMBER	RECOVERY % (RQD)	BLOW COUNTS (N VALUE)	POCKET PEN. (tsf)	TORVANE (tsf)	Compressive Strength (tsf)	Confining Pressure (psi)	DRY UNIT WT. (pcf)	MOISTURE CONTENT (%)	ATTERBERG LIMITS: LIQUID LIMIT	ATTERBERG LIMITS: PLASTIC LIMIT	ATTERBERG LIMITS: PLASTICITY INDEX	FINES CONTENT (%)
	0.0		PAVEMENT - 2-Inch BASE.													
265.0			SANDY LEAN CLAY (CL) FILL - Hard, light brown and reddish brown.	ST			4.50+	2.4				13	30	14	16	60
	2.5		SANDY LEAN CLAY (CL) / LEAN CLAY WITH SAND (CL) - Hard, light brown and reddish brown.													
262.5				ST			4.50+	2.4				16				
	5.0			ST			4.50+	2.4								
260.0																
	7.5			ST			4.50+	1.3				17				
257.5																
	10.0			ST			4.50+	1.8								

Bottom of hole at 10.0 feet.

Riner Engineering, Inc.
4641 Kennedy Commerce Drive, Houston, TX 77032
Telephone: 281-469-3347; Fax: 281-469.3594

BORING NUMBER B-18

CLIENT Freese and Nichols, Inc.
PROJECT NAME SRA Toledo Bend Fishing Tournament Site
PROJECT NUMBER 22-0769
PROJECT LOCATION Hemphill, Texas
DATE STARTED 11/15/22 **COMPLETED** 11/15/22
GROUND ELEVATION 268.364 ft **NORTHING** 10529902.1
CONTRACTOR RINER
GROUND WATER LEVELS: **EASTING** 4349388.093
METHOD Auger 0 - 10 feet
INITIALLY ENCOUNTERED Not Encountered
LOGGED BY J.C. **CHECKED BY** A.A.
AFTER 15 MIN. Not Measured
NOTES Survey data as provided by client in PNEZD format
AFTER ---

ELEVATION (ft)	DEPTH (ft)	GRAPHIC LOG	MATERIAL DESCRIPTION	SAMPLE TYPE NUMBER	RECOVERY % (RQD)	BLOW COUNTS (N VALUE)	POCKET PEN. (tsf)	TORVANE (tsf)	Compressive Strength (tsf)	Confining Pressure (psi)	DRY UNIT WT. (pcf)	MOISTURE CONTENT (%)	ATTERBERG LIMITS: LIQUID LIMIT	ATTERBERG LIMITS: PLASTIC LIMIT	ATTERBERG LIMITS: PLASTICITY INDEX	FINES CONTENT (%)
	0.0		PAVEMENT - 2-Inch BASE.													
267.5			SILTY, CLAYEY SAND (SC-SM) FILL - Light brown.	AU								7				32
	2.5		SANDY LEAN CLAY (CL) / LEAN CLAY WITH SAND (CL) - Stiff to hard, light brown and reddish brown.													
265.0				ST			4.50+	2.3								
	5.0			ST			4.50+	2.3				20				
262.5																
	7.5			ST			4.50+	2.1								
260.0																
	10.0			ST			2.0	0.8				26				

Bottom of hole at 10.0 feet.

NEW TEMPLATE W/T ELEVATION 22-0769.GPJ NEW GINT TEMP GDT 3/22/23

FREESE AND NICHOLS, INC.
TEXAS REGISTERED ENGINEERING FIRM F-2144

STATE OF TEXAS
COURTNEY I CUNNINGHAM
141398
LICENSED PROFESSIONAL ENGINEER
04-11-2023

FREESE AND NICHOLS
801 Cherry Street, Suite 2800
Fort Worth, TX 76102
Phone - (817) 735-7300
Web - www.freese.com

SABINE RIVER AUTHORITY TOLEDO BEND FISHING TOURNAMENT SITE
ROADWAY AND DRAINAGE ENGINEERING DESIGN

BORING LOGS
B-17 AND B-18

F&N JOB NO. OFF00000
DATE 00/00/00
DESIGNED
DRAWN
REVISED
CHECKED
FILE NAME BORING09.dgn

NO. | ISSUES | BY | DATE

VERIFY SCALE Bar is one inch on original drawing. If not one inch on this sheet, adjust scale.
0 1

SHEET
SEQ.

ISSUE FOR BID

Riner Engineering, Inc.
4641 Kennedy Commerce Drive, Houston, TX 77032
Telephone: 281-469-3347; Fax: 281-469.3594

BORING NUMBER B-19

CLIENT Freese and Nichols, Inc.
PROJECT NAME SRA Toledo Bend Fishing Tournament Site
PROJECT NUMBER 22-0769
PROJECT LOCATION Hemphill, Texas
DATE STARTED 11/15/22 **COMPLETED** 11/15/22
GROUND ELEVATION 271.341 ft **NORTHING** 10530285.21
CONTRACTOR RINER
GROUND WATER LEVELS: **EASTING** 4349719.497
METHOD Auger 0 - 10 feet
INITIALLY ENCOUNTERED Not Encountered
LOGGED BY J.C. **CHECKED BY** A.A.
AFTER 15 MIN. Not Measured
NOTES Survey data as provided by client in PNEZD format
AFTER ---

ELEVATION (ft)	DEPTH (ft)	GRAPHIC LOG	MATERIAL DESCRIPTION	SAMPLE TYPE NUMBER	RECOVERY % (RQD)	BLOW COUNTS (N VALUE)	POCKET PEN. (tsf)	TORVANE (tsf)	Compressive Strength (tsf)	Confining Pressure (psi)	DRY UNIT WT. (pcf)	MOISTURE CONTENT (%)	ATTERBERG LIMITS: LIQUID LIMIT	ATTERBERG LIMITS: PLASTIC LIMIT	ATTERBERG LIMITS: PLASTICITY INDEX	FINES CONTENT (%)
	0.0		PAVEMENT - 2-Inch BASE.													
270.0			SANDY LEAN CLAY (CL) FILL - Hard, light brown and reddish brown.	ST			4.50+	1.50				13				
	2.5		SILTY SAND (SM) - Medium dense, light brown.	SS		8-7-16 (23)						6				50
267.5			SANDY LEAN CLAY (CL) / LEAN CLAY WITH SAND (CL) - Hard, light brown and reddish brown.													
	5.0			ST			4.50+	2.3								
265.0				ST			4.50+	2.1				14				
	7.5															
262.5				ST			4.50+	2.1								
	10.0															

Bottom of hole at 10.0 feet.

Riner Engineering, Inc.
4641 Kennedy Commerce Drive, Houston, TX 77032
Telephone: 281-469-3347; Fax: 281-469.3594

BORING NUMBER B-20

CLIENT Freese and Nichols, Inc.
PROJECT NAME SRA Toledo Bend Fishing Tournament Site
PROJECT NUMBER 22-0769
PROJECT LOCATION Hemphill, Texas
DATE STARTED 11/15/22 **COMPLETED** 11/15/22
GROUND ELEVATION 279.591 ft **NORTHING** 10530725.66
CONTRACTOR RINER
GROUND WATER LEVELS: **EASTING** 4349959.288
METHOD Auger 0 - 10 feet
INITIALLY ENCOUNTERED Not Encountered
LOGGED BY J.C. **CHECKED BY** A.A.
AFTER 15 MIN. Not Measured
NOTES Survey data as provided by client in PNEZD format
AFTER ---

ELEVATION (ft)	DEPTH (ft)	GRAPHIC LOG	MATERIAL DESCRIPTION	SAMPLE TYPE NUMBER	RECOVERY % (RQD)	BLOW COUNTS (N VALUE)	POCKET PEN. (tsf)	TORVANE (tsf)	Compressive Strength (tsf)	Confining Pressure (psi)	DRY UNIT WT. (pcf)	MOISTURE CONTENT (%)	ATTERBERG LIMITS: LIQUID LIMIT	ATTERBERG LIMITS: PLASTIC LIMIT	ATTERBERG LIMITS: PLASTICITY INDEX	FINES CONTENT (%)
	0.0		PAVEMENT - 2-Inch BASE.													
277.5			SILTY, CLAYEY SAND SAND (SC-SM) FILL - Light gray and light brown.	AU								19				26
	2.5		SANDY LEAN CLAY (CL) / LEAN CLAY WITH SAND (CL) - Hard, light brown and reddish brown.	ST			4.50+	2.0								
275.0																
	5.0			ST			4.50+	2.0				15				
272.5				ST			4.50+	1.8								
	7.5															
270.0				ST			4.50+	1.8				12				
	10.0															

Bottom of hole at 10.0 feet.

ISSUE FOR BID

FREESE AND NICHOLS, INC.
TEXAS REGISTERED ENGINEERING FIRM F-2144

STATE OF TEXAS
COURTNEY I. CUNNINGHAM
141398
LICENSED PROFESSIONAL ENGINEER
04-11-2023

FREESE AND NICHOLS
801 Cherry Street, Suite 2800
Fort Worth, TX 76102
Phone - (817) 735-7300
Web - www.freese.com

SABINE RIVER AUTHORITY TOLEDO BEND FISHING TOURNAMENT SITE
ROADWAY AND DRAINAGE ENGINEERING DESIGN

BORING LOGS
B-19 AND B-20

NO.	ISSUES	BY	DATE

F&N JOB NO. OFF00000
DATE 00/00/00
DESIGNED
DRAWN
REVISED
CHECKED
FILE NAME BORING10.dgn

VERIFY SCALE Bar is one inch on original drawing. If not one inch on this sheet, adjust scale.
0 1

SHEET
SEQ.

MicroStation V8 User: freesepw11\cs02
Workspace: C:\Bentley\Workspaces\Freese and Nichols Inc\
Plotter: PDF Plot Driver
Plot Scale: 1.000 ' / in.
Date: Apr. 03, 2023 - 10:59:23 PM
Model: Default
Project: Freese and Nichols Inc

Office: Date: Apr. 03, 2023 - 10:59:23 PM User: freesepw11\cs02 File: C:\Bentley\Workspaces\freesepw11\cs02\CS_pdf_work_dir\3812\28156_15\BORING10.dgn

Riner Engineering, Inc.
4641 Kennedy Commerce Drive, Houston, TX 77032
Telephone: 281-469-3347; Fax: 281-469.3594

BORING NUMBER B-21

CLIENT Freese and Nichols, Inc.
PROJECT NAME SRA Toledo Bend Fishing Tournament Site
PROJECT NUMBER 22-0769
PROJECT LOCATION Hemphill, Texas
DATE STARTED 11/15/22 **COMPLETED** 11/15/22
GROUND ELEVATION 287.216 ft **NORTHING** 10531093.54
CONTRACTOR RINER
GROUND WATER LEVELS: **EASTING** 4350373.101
METHOD Auger 0 - 10 feet
INITIALLY ENCOUNTERED Not Encountered
LOGGED BY J.C. **CHECKED BY** A.A.
AFTER 15 MIN. Not Measured
NOTES Survey data as provided by client in PNEZD format
AFTER ---

ELEVATION (ft)	DEPTH (ft)	GRAPHIC LOG	MATERIAL DESCRIPTION	SAMPLE TYPE NUMBER	RECOVERY % (RQD)	BLOW COUNTS (N VALUE)	POCKET PEN. (tsf)	TORVANE (tsf)	Compressive Strength (tsf)	Confining Pressure (psi)	DRY UNIT WT. (pcf)	MOISTURE CONTENT (%)	ATTERBERG LIMITS: LIQUID LIMIT	ATTERBERG LIMITS: PLASTIC LIMIT	ATTERBERG LIMITS: PLASTICITY INDEX	FINES CONTENT (%)
	0.0		PAVEMENT - 2-Inch BASE.													
			SILTY, CLAYEY SAND SAND (SC-SM) FILL - Light gray and light brown.	AU								8				
285.0	2.5		SANDY FAT CLAY (CH) - Hard, light brown and reddish brown.	ST			4.50+	2.4				19	58	20	38	50
282.5	5.0		SANDY LEAN CLAY (CL) / LEAN CLAY WITH SAND (CL) - Hard, light brown and reddish brown.	ST			4.50+	1.9								
280.0	7.5			ST			4.50+	1.6				13				
277.5	10.0			ST			4.50+	1.6								

Bottom of hole at 10.0 feet.

Riner Engineering, Inc.
4641 Kennedy Commerce Drive, Houston, TX 77032
Telephone: 281-469-3347; Fax: 281-469.3594

BORING NUMBER B-22

CLIENT Freese and Nichols, Inc.
PROJECT NAME SRA Toledo Bend Fishing Tournament Site
PROJECT NUMBER 22-0769
PROJECT LOCATION Hemphill, Texas
DATE STARTED 11/15/22 **COMPLETED** 11/15/22
GROUND ELEVATION 293.021 ft **NORTHING** 10531408.03
CONTRACTOR RINER
GROUND WATER LEVELS: **EASTING** 4350688.056
METHOD Auger 0 - 10 feet
INITIALLY ENCOUNTERED Not Encountered
LOGGED BY J.C. **CHECKED BY** A.A.
AFTER 15 MIN. Not Measured
NOTES Survey data as provided by client in PNEZD format
AFTER ---

ELEVATION (ft)	DEPTH (ft)	GRAPHIC LOG	MATERIAL DESCRIPTION	SAMPLE TYPE NUMBER	RECOVERY % (RQD)	BLOW COUNTS (N VALUE)	POCKET PEN. (tsf)	TORVANE (tsf)	Compressive Strength (tsf)	Confining Pressure (psi)	DRY UNIT WT. (pcf)	MOISTURE CONTENT (%)	ATTERBERG LIMITS: LIQUID LIMIT	ATTERBERG LIMITS: PLASTIC LIMIT	ATTERBERG LIMITS: PLASTICITY INDEX	FINES CONTENT (%)
	0.0		PAVEMENT - 2-Inch BASE.													
292.5			SILTY, CLAYEY SAND SAND (SC-SM) FILL - Light gray and light brown.	AU								5				20
290.0	2.5		SILTY SAND (SM) - Medium dense, light gray and light brown.	SS		7-10-9 (19)										
	5.0		SANDY LEAN CLAY (CL) / LEAN CLAY WITH SAND (CL) - Hard, light brown and reddish brown.	ST			4.50+	2.1				15				
287.5	7.5			ST			4.50+	2.4								
285.0	10.0			ST			4.50+	1.8				11				

Bottom of hole at 10.0 feet.

ISSUE FOR BID

FREESE AND NICHOLS, INC.
TEXAS REGISTERED ENGINEERING FIRM F-2144

STATE OF TEXAS
COURTNEY I. CUNNINGHAM
141398
LICENSED PROFESSIONAL ENGINEER
04-11-2023

FREESE AND NICHOLS
801 Cherry Street, Suite 2800
Fort Worth, TX 76102
Phone - (817) 735-7300
Web - www.freese.com

SABINE RIVER AUTHORITY TOLEDO BEND FISHING TOURNAMENT SITE
ROADWAY AND DRAINAGE ENGINEERING DESIGN
BORING LOGS
B-21 AND B-22

F&N JOB NO. OFF00000
DATE 00/00/00
DESIGNED
DRAWN
REVISED
CHECKED
FILE NAME BORING11.dgn

NO. | ISSUES | BY | DATE

VERIFY SCALE 0 1
Bar is one inch on original drawing.
If not one inch on this sheet, adjust scale.

SHEET
SEQ.

MicroStation V8 User: freesepw11
Office: freesepw11\cs02\ICS_pdf_work_dir\3812\28156_16\BORING11.dgn
Plotter: C:\Program Files\PDF Converter\Bentley PDF Printer.pltr
Plot Scale: 1.000 ' / in.
Date: Apr. 03, 2023 - 10:59:43 PM
Model: Default
Project: Freese and Nichols Inc.

NEW TEMPLATE W/T ELEVATION 22-0769.GPJ NEW GINT TEMP.GDT 3/22/23

Office: Date: Apr. 03, 2023 - 10:59:43 PM User: freesepw11 File: freesepw11\cs02\ICS_pdf_work_dir\3812\28156_16\BORING11.dgn

Riner Engineering, Inc.
4641 Kennedy Commerce Drive, Houston, TX 77032
Telephone: 281-469-3347; Fax: 281-469.3594

BORING NUMBER B-23

CLIENT Freese and Nichols, Inc.
PROJECT NAME SRA Toledo Bend Fishing Tournament Site
PROJECT NUMBER 22-0769
PROJECT LOCATION Hemphill, Texas
DATE STARTED 11/15/22 **COMPLETED** 11/15/22
GROUND ELEVATION 279.667 ft **NORTHING** 10531869.61
CONTRACTOR RINER
GROUND WATER LEVELS: **EASTING** 4350848.568
METHOD Auger 0 - 10 feet
INITIALLY ENCOUNTERED Not Encountered
LOGGED BY J.C. **CHECKED BY** A.A.
AFTER 15 MIN. Not Measured
NOTES Survey data as provided by client in PNEZD format
AFTER ---

ELEVATION (ft)	DEPTH (ft)	GRAPHIC LOG	MATERIAL DESCRIPTION	SAMPLE TYPE NUMBER	RECOVERY % (RQD)	BLOW COUNTS (N VALUE)	POCKET PEN. (tsf)	TORVANE (tsf)	Compressive Strength (tsf)	Confining Pressure (psi)	DRY UNIT WT. (pcf)	MOISTURE CONTENT (%)	ATTERBERG LIMITS: LIQUID LIMIT	ATTERBERG LIMITS: PLASTIC LIMIT	ATTERBERG LIMITS: PLASTICITY INDEX	FINES CONTENT (%)
	0.0		PAVEMENT - 2-Inch BASE.													
			SILTY, CLAYEY SAND SAND (SC-SM) FILL - Light gray and light brown.	ST								13				23
277.5	2.5		CLAYEY SAND (SC) - Soft to hard, light brown and reddish brown.	ST			1.00	0.3				8				
275.0	5.0			ST			4.50+	2.3								
272.5	7.5			ST			4.50+	2.4				13	29	15	14	46
270.0	10.0			ST			4.50+	1.3								

Bottom of hole at 10.0 feet.

Riner Engineering, Inc.
4641 Kennedy Commerce Drive, Houston, TX 77032
Telephone: 281-469-3347; Fax: 281-469.3594

BORING NUMBER B-24

CLIENT Freese and Nichols, Inc.
PROJECT NAME SRA Toledo Bend Fishing Tournament Site
PROJECT NUMBER 22-0769
PROJECT LOCATION Hemphill, Texas
DATE STARTED 11/15/22 **COMPLETED** 11/15/22
GROUND ELEVATION 286.114 ft **NORTHING** 10532399.29
CONTRACTOR RINER
GROUND WATER LEVELS: **EASTING** 4350858.671
METHOD Auger 0 - 10 feet
INITIALLY ENCOUNTERED Not Encountered
LOGGED BY J.C. **CHECKED BY** A.A.
AFTER 15 MIN. Not Measured
NOTES Survey data as provided by client in PNEZD format
AFTER ---

ELEVATION (ft)	DEPTH (ft)	GRAPHIC LOG	MATERIAL DESCRIPTION	SAMPLE TYPE NUMBER	RECOVERY % (RQD)	BLOW COUNTS (N VALUE)	POCKET PEN. (tsf)	TORVANE (tsf)	Compressive Strength (tsf)	Confining Pressure (psi)	DRY UNIT WT. (pcf)	MOISTURE CONTENT (%)	ATTERBERG LIMITS: LIQUID LIMIT	ATTERBERG LIMITS: PLASTIC LIMIT	ATTERBERG LIMITS: PLASTICITY INDEX	FINES CONTENT (%)
	0.0		PAVEMENT - 2-Inch BASE.													
285.0			SILTY, CLAYEY SAND SAND (SC-SM) FILL - Light gray and light brown.	AU								10				31
	2.5		SILTY SAND (SM) - Medium dense, light gray and light brown.	SS		9-13-10 (23)										
282.5																
	5.0		SANDY LEAN CLAY (CL) - Hard, light brown and reddish brown.	ST			4.50+	2.4				15				
280.0	7.5			ST			4.50+	2.4								
277.5	10.0			ST			4.50+	2.3				12				

Bottom of hole at 10.0 feet.

FREESE AND NICHOLS, INC.
TEXAS REGISTERED ENGINEERING FIRM F-2144

STATE OF TEXAS
COURTNEY I. CUNNINGHAM
141398
LICENSED PROFESSIONAL ENGINEER
04-11-2023

FREESE AND NICHOLS
801 Cherry Street, Suite 2800
Fort Worth, TX 76102
Phone - (817) 735-7300
Web - www.freese.com

SABINE RIVER AUTHORITY TOLEDO BEND FISHING TOURNAMENT SITE
ROADWAY AND DRAINAGE ENGINEERING DESIGN

BORING LOGS
B-23 AND B-24

F&N JOB NO. OFF00000
DATE 00/00/00
DESIGNED
DRAWN
REVISED
CHECKED
FILE NAME BORING12.dgn

NO.	ISSUES	BY	DATE

VERIFY SCALE 0 1
Bar is one inch on original drawing.
If not one inch on this sheet, adjust scale.

SHEET
SEQ.

ISSUE FOR BID

Riner Engineering, Inc.
4641 Kennedy Commerce Drive, Houston, TX 77032
Telephone: 281-469-3347; Fax: 281-469.3594

BORING NUMBER B-25

CLIENT Freese and Nichols, Inc.
PROJECT NAME SRA Toledo Bend Fishing Tournament Site
PROJECT NUMBER 22-0769
PROJECT LOCATION Hemphill, Texas
DATE STARTED 11/15/22 **COMPLETED** 11/15/22
GROUND ELEVATION 288.529 ft **NORTHING** 10532920.15
CONTRACTOR RINER
GROUND WATER LEVELS: **EASTING** 4350836.384
METHOD Auger 0 - 10 feet
INITIALLY ENCOUNTERED Not Encountered
LOGGED BY J.C. **CHECKED BY** A.A.
AFTER 15 MIN. Not Measured
NOTES Survey data as provided by client in PNEZD format
AFTER ---

ELEVATION (ft)	DEPTH (ft)	GRAPHIC LOG	MATERIAL DESCRIPTION	SAMPLE TYPE NUMBER	RECOVERY % (RQD)	BLOW COUNTS (N VALUE)	POCKET PEN. (tsf)	TORVANE (tsf)	Compressive Strength (tsf)	Confining Pressure (psi)	DRY UNIT WT. (pcf)	MOISTURE CONTENT (%)	ATTERBERG LIMITS: LIQUID LIMIT	PLASTIC LIMIT	PLASTICITY INDEX	FINES CONTENT (%)
	0.0		PAVEMENT - 2-Inch BASE.													
287.5			SILTY, CLAYEY SAND SAND (SC-SM) FILL - Light gray and light brown.	AU								9				33
	2.5		SANDY LEAN CLAY (CL) / LEAN CLAY WITH SAND (CL) - Stiff to very stiff, light brown and reddish brown.	ST			3.00	1.0				9				
285.0																
	5.0			ST			2.00	0.8								
282.5																
	7.5			ST			3.50	1.5				21				
280.0																
	10.0			ST			2.00	1.0								

Bottom of hole at 10.0 feet.

Riner Engineering, Inc.
4641 Kennedy Commerce Drive, Houston, TX 77032
Telephone: 281-469-3347; Fax: 281-469.3594

BORING NUMBER B-26

CLIENT Freese and Nichols, Inc.
PROJECT NAME SRA Toledo Bend Fishing Tournament Site
PROJECT NUMBER 22-0769
PROJECT LOCATION Hemphill, Texas
DATE STARTED 11/15/22 **COMPLETED** 11/15/22
GROUND ELEVATION 280.152 ft **NORTHING** 10533386.37
CONTRACTOR RINER
GROUND WATER LEVELS: **EASTING** 4350867.728
METHOD Auger 0 - 10 feet
INITIALLY ENCOUNTERED Not Encountered
LOGGED BY J.C. **CHECKED BY** A.A.
AFTER 15 MIN. Not Measured
NOTES Survey data as provided by client in PNEZD format
AFTER ---

ELEVATION (ft)	DEPTH (ft)	GRAPHIC LOG	MATERIAL DESCRIPTION	SAMPLE TYPE NUMBER	RECOVERY % (RQD)	BLOW COUNTS (N VALUE)	POCKET PEN. (tsf)	TORVANE (tsf)	Compressive Strength (tsf)	Confining Pressure (psi)	DRY UNIT WT. (pcf)	MOISTURE CONTENT (%)	ATTERBERG LIMITS: LIQUID LIMIT	PLASTIC LIMIT	PLASTICITY INDEX	FINES CONTENT (%)
280.0	0.0		PAVEMENT - 4.5-Inch BASE.													
			SILTY, CLAYEY SAND SAND (SC-SM) FILL - Light gray and light brown.	AU								11				29
277.5	2.5		SANDY LEAN CLAY (CL) / LEAN CLAY WITH SAND (CL) - Soft to very stiff, light brown and reddish brown.	ST			4.00	1.8								
275.0	5.0			ST			1.00	0.5				22				
272.5	7.5		SANDY FAT CLAY (CH) / FAT CLAY WITH SAND (CH) - Stiff, light brown and reddish brown.	ST			2.00	1.0								
	10.0			ST			2.50	1.0				37				

Bottom of hole at 10.0 feet.

NEW TEMPLATE W/T ELEVATION 22-0769.GPJ NEW GINT TEMP GDT 3/22/23

FREESE AND NICHOLS, INC.
TEXAS REGISTERED ENGINEERING FIRM F-2144

STATE OF TEXAS
COURTNEY I. CUNNINGHAM
141398
LICENSED PROFESSIONAL ENGINEER
04-11-2023

FREESE AND NICHOLS
801 Cherry Street, Suite 2800
Fort Worth, TX 76102
Phone - (817) 735-7300
Web - www.freese.com

SABINE RIVER AUTHORITY TOLEDO BEND FISHING TOURNAMENT SITE
ROADWAY AND DRAINAGE ENGINEERING DESIGN

BORING LOGS
B-25 AND B-26

F&N JOB NO. OFF00000
DATE 00/00/00
DESIGNED
DRAWN
REVISED
CHECKED
FILE NAME BORING13.dgn

NO. | ISSUES | BY | DATE

VERIFY SCALE Bar is one inch on original drawing. If not one inch on this sheet, adjust scale.
0 1

SHEET
SEQ.

ISSUE FOR BID

MicroStation V8 User: freesepw11\cs02\
Office: \\freesepw11\cs02\CS_pdf_work_dir\38\28156\18\BORING13.dgn
Plotter: C:\Program Files\Bentley\Select\Plotters\Default.pltr
Plot Scale: 1.000 / 1 in.
Date: Apr. 03, 2023 - 10:59:42 PM
Model: Default
Project: Freese and Nichols, Inc.

Office: Date: Apr. 03, 2023 - 10:59:42 PM User: freesepw11\cs02\ File: freesepw11\cs02\CS_pdf_work_dir\3812\28156_18\BORING13.dgn

Riner Engineering, Inc.
4641 Kennedy Commerce Drive, Houston, TX 77032
Telephone: 281-469-3347; Fax: 281-469.3594

BORING NUMBER B-27

PAGE 1 OF 1

CLIENT Freese and Nichols, Inc.
PROJECT NAME SRA Toledo Bend Fishing Tournament Site
PROJECT NUMBER 22-0769
PROJECT LOCATION Hemphill, Texas
DATE STARTED 11/15/22 **COMPLETED** 11/15/22
GROUND ELEVATION 274.965 ft **NORTHING** 10533868.93
CONTRACTOR RINER
GROUND WATER LEVELS: **EASTING** 4350928.691
METHOD Auger 0 - 10 feet
INITIALLY ENCOUNTERED Not Encountered
LOGGED BY J.C. **CHECKED BY** A.A.
AFTER 15 MIN. Not Measured
NOTES Survey data as provided by client in PNEZD format
AFTER ---

ELEVATION (ft)	DEPTH (ft)	MATERIAL DESCRIPTION	SAMPLE TYPE NUMBER	RECOVERY % (RQD)	BLOW COUNTS (N VALUE)	POCKET PEN. (tsf)	TORVANE (tsf)	Compressive Strength (tsf)	Confining Pressure (psi)	DRY UNIT WT. (pcf)	MOISTURE CONTENT (%)	LIQUID LIMIT	PLASTIC LIMIT	PLASTICITY INDEX	FINES CONTENT (%)
	0.0	PAVEMENT - 2-Inch BASE.													
		SILTY, CLAYEY SAND SAND (SC-SM) FILL - Light gray and light brown.	AU								12				28
272.5	2.5	SANDY LEAN CLAY (CL) / LEAN CLAY WITH SAND (CL) - Hard, light brown and reddish brown.	ST			4.50+	1.0								
270.0	5.0		ST			4.50+	1.0								
267.5	7.5	SILTY SAND (SM) - Medium dense, light gray and light brown.	SS		7-10-13 (23)						4				
265.0	10.0	FAT CLAY WITH SAND (CH) - Hard, light brown and reddish brown.	ST			4.50+	2.1								

Bottom of hole at 10.0 feet.

Riner Engineering, Inc.
4641 Kennedy Commerce Drive, Houston, TX 77032
Telephone: 281-469-3347; Fax: 281-469.3594

BORING NUMBER B-28

PAGE 1 OF 1

CLIENT Freese and Nichols, Inc.
PROJECT NAME SRA Toledo Bend Fishing Tournament Site
PROJECT NUMBER 22-0769
PROJECT LOCATION Hemphill, Texas
DATE STARTED 11/15/22 **COMPLETED** 11/15/22
GROUND ELEVATION 267.529 ft **NORTHING** 10534355.78
CONTRACTOR RINER
GROUND WATER LEVELS: **EASTING** 4350963.712
METHOD Auger 0 - 10 feet
INITIALLY ENCOUNTERED Not Encountered
LOGGED BY J.C. **CHECKED BY** A.A.
AFTER 15 MIN. Not Measured
NOTES Survey data as provided by client in PNEZD format
AFTER ---

ELEVATION (ft)	DEPTH (ft)	MATERIAL DESCRIPTION	SAMPLE TYPE NUMBER	RECOVERY % (RQD)	BLOW COUNTS (N VALUE)	POCKET PEN. (tsf)	TORVANE (tsf)	Compressive Strength (tsf)	Confining Pressure (psi)	DRY UNIT WT. (pcf)	MOISTURE CONTENT (%)	LIQUID LIMIT	PLASTIC LIMIT	PLASTICITY INDEX	FINES CONTENT (%)
267.5	0.0	PAVEMENT - 2-Inch BASE.													
		SANDY LEAN CLAY (CL) FILL - Hard, light brown and reddish brown.	ST			4.50+	2.4				14				
265.0	2.5	CLAYEY SAND (SC) - Very stiff to hard, light brown and reddish brown.	ST			4.50+	2.4				11	51	16	35	30
262.5	5.0		ST			3.50	1.9				18				
260.0	7.5	SANDY FAT CLAY (CH) / FAT CLAY WITH SAND (CH) - Stiff, light brown and reddish brown.	ST			2.50	1.3								
	10.0		ST			3.00	1.3				27				

Bottom of hole at 10.0 feet.

ISSUE FOR BID

FREESE AND NICHOLS, INC.
TEXAS REGISTERED ENGINEERING FIRM F-2144

STATE OF TEXAS
COURTNEY L CUNNINGHAM
141398
LICENSED PROFESSIONAL ENGINEER
04-11-2023

FREESE AND NICHOLS
801 Cherry Street, Suite 2800
Fort Worth, TX 76102
Phone: (817) 735-7300
Web - www.freese.com

SABINE RIVER AUTHORITY TOLEDO BEND FISHING TOURNAMENT SITE
ROADWAY AND DRAINAGE ENGINEERING DESIGN

BORING LOGS
B-27 AND B-28

F&N JOB NO. OFF00000
DATE 00/00/00
DESIGNED
DRAWN
REVISED
CHECKED
FILE NAME BORING14.dgn

NO.	ISSUES	BY	DATE

VERIFY SCALE Bar is one inch on original drawing. If not one inch on this sheet, adjust scale.
0 1

SHEET
SEQ.

MicroStation V8 User: freesepw11\jlaw026
Office: freesepw11\cs02\CS_pdf_work_dir\3812\28156_19\BORING14.dgn
Plotter: C:\Program Files\Bentley\Common\Plotters\Plot2Pdf.pltr
Plot Scale: 1.000 / 1 in. Model: Default
Date: Apr. 03, 2023 - 10:59:58 PM Project: Freese and Nichols Inc.

Office: Date: Apr. 03, 2023 - 10:59:58 PM User: freesepw11\jlaw026 File: freesepw11\cs02\CS_pdf_work_dir\3812\28156_19\BORING14.dgn

NEW TEMPLATE W/T ELEVATION 22-0769.GPJ NEW GINT TEMP.GDT 3/22/23

Riner Engineering, Inc.
4641 Kennedy Commerce Drive, Houston, TX 77032
Telephone: 281-469-3347; Fax: 281-469.3594

BORING NUMBER B-29

CLIENT Freese and Nichols, Inc.
PROJECT NAME SRA Toledo Bend Fishing Tournament Site
PROJECT NUMBER 22-0769
PROJECT LOCATION Hemphill, Texas
DATE STARTED 11/15/22 **COMPLETED** 11/15/22
GROUND ELEVATION 268.497 ft **NORTHING** 10534862.38
CONTRACTOR RINER
GROUND WATER LEVELS: **EASTING** 4351027.327
METHOD Auger 0 - 10 feet
INITIALLY ENCOUNTERED Not Encountered
LOGGED BY J.C. **CHECKED BY** A.A.
AFTER 15 MIN. Not Measured
NOTES Survey data as provided by client in PNEZD format
AFTER ---

ELEVATION (ft)	DEPTH (ft)	GRAPHIC LOG	MATERIAL DESCRIPTION	SAMPLE TYPE NUMBER	RECOVERY % (RQD)	BLOW COUNTS (N VALUE)	POCKET PEN. (tsf)	TORVANE (tsf)	Compressive Strength (tsf)	Confining Pressure (psi)	DRY UNIT WT. (pcf)	MOISTURE CONTENT (%)	ATTERBERG LIMITS: LIQUID LIMIT	ATTERBERG LIMITS: PLASTIC LIMIT	ATTERBERG LIMITS: PLASTICITY INDEX	FINES CONTENT (%)
	0.0		PAVEMENT - 2-Inch BASE.													
267.5			SILTY, CLAYEY SAND SAND (SC-SM) FILL - Light gray and light brown.	AU								12				35
265.0	2.5		SANDY LEAN CLAY (CL) / LEAN CLAY WITH SAND (CL) - Hard, light brown and reddish brown.	ST			4.50+	2.4				10				
	5.0			ST			4.50+	2.4								
262.5	7.5		SILTY SAND (SM) - Dense, light gray and light brown.	SS		12-16-18 (34)						9				
260.0	10.0			SS		13-16-19 (35)										

Bottom of hole at 10.0 feet.

NEW TEMPLATE W/T ELEVATION 22-0769.GPJ NEW GINT TEMP.GDT 3/22/23

ISSUE FOR BID

FREESE AND NICHOLS, INC.
TEXAS REGISTERED ENGINEERING FIRM F-2144
STATE OF TEXAS
COURTNEY I CUNNINGHAM
141398
LICENSED PROFESSIONAL ENGINEER
04-11-2023

FREESE AND NICHOLS
801 Cherry Street, Suite 2800
Fort Worth, TX 76102
Phone: (817) 735-7300
Web - www.freese.com

SABINE RIVER AUTHORITY TOLEDO BEND FISHING TOURNAMENT SITE
ROADWAY AND DRAINAGE ENGINEERING DESIGN
BORING LOGS
B-29

F&N JOB NO. OFF00000
DATE 00/00/00
DESIGNED
DRAWN
REVISED
CHECKED
FILE NAME BORING15.dgn

NO. | ISSUES | BY | DATE

VERIFY SCALE Bar is one inch on original drawing. If not one inch on this sheet, adjust scale. 0 1"

SHEET
SEQ.

MicroStation V8 User: freesepw11cs02 Office: Office
Plotter: C:\Program Files\PDFCompressor\PDFCompressor.pt Model: Default
Plot Scale: 1.000 " / ft Project: Freese and Nichols, Inc.
Date: Apr. 03, 2023 - 11:00:11 PM

Office: Date: Apr. 03, 2023 - 11:00:11 PM User: freesepw11cs02 File: C:\pw_work\freesepw11cs02\ICS_pdf_work_dir\3812\28156_20\BORING15.dgn

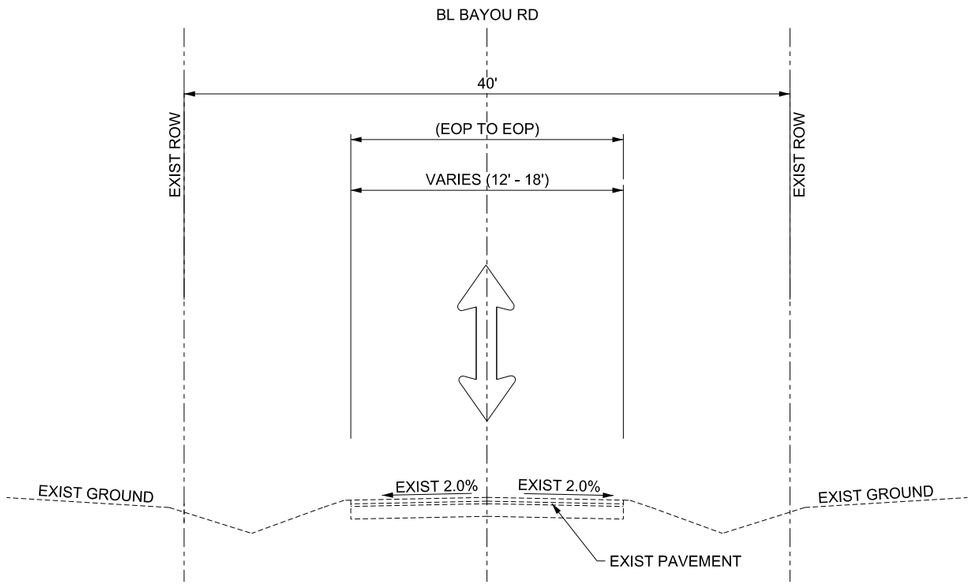

EXISTING
TYPICAL CROSS-SECTION - BAYOU RD

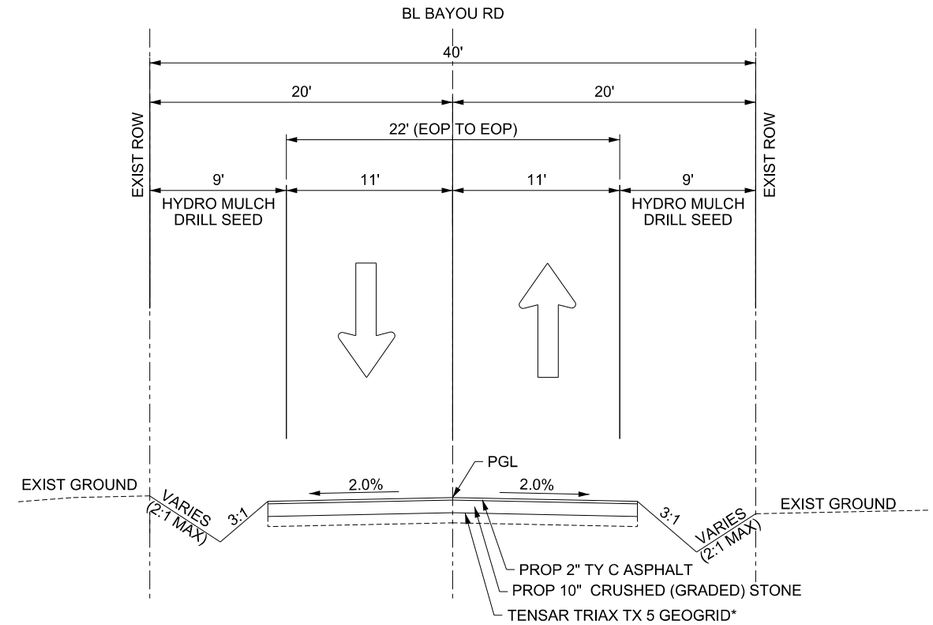

PROPOSED
TYPICAL CROSS-SECTION - BAYOU RD
STA 1+00 TO STA 29+95, STA 30+35 TO STA 43+40, STA 44+01 TO STA 66+07,
STA 66+32 TO STA 70+48, STA 70+73 TO STA 91+92, STA 92+75 TO STA 122+13,
STA 122+52 TO STA 131+87, STA 132+56 TO STA 143+25, STA 144+61 TO STA 149+40

* THE PREPARED SUBGRADE SOIL SHOULD BE PROOF ROLLED NO EARLIER THAN 72 HOURS PRIOR TO PLACEMENT OF THE GEOGRID.

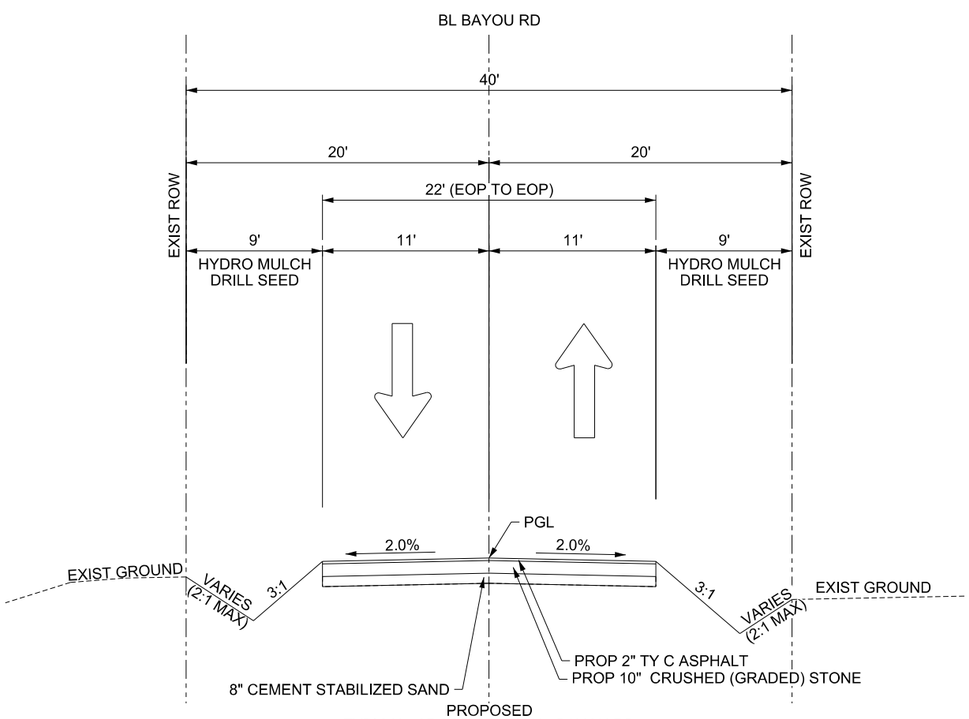

PROPOSED
TYPICAL CROSS-SECTION - BAYOU RD
STA 29+95 TO STA 30+35, STA 43+40 TO STA 44+01, STA 66+07 TO STA 66+32,
STA 70+48 TO STA 70+73, STA 91+92, STA 92+75, STA 122+13 TO STA 122+52,
STA 131+87 TO STA 132+56,STA 143+25 TO STA 144+61

NOTE: TENSAR TRIAX TX 5 GEOGRID NOT NEED IN AREAS WHERE FULL DEPTH RECONSTRUCTION.

ISSUE FOR BID

FREESE AND NICHOLS, INC.
TEXAS REGISTERED ENGINEERING FIRM F-2144

STATE OF TEXAS
COURTNEY I CUNNINGHAM
141398
LICENSED PROFESSIONAL ENGINEER
04-11-2023

FREESE AND NICHOLS
801 Cherry Street, Suite 2800
Fort Worth, TX 76102
Phone - (817) 735-7300
Web - www.freese.com

SABINE RIVER AUTHORITY TOLEDO BEND FISHING TOURNAMENT SITE
ROADWAY AND DRAINAGE ENGINEERING DESIGN

EXISTING AND PROPOSED
TYPICAL SECTIONS

NO.	ISSUES	BY	DATE

F&N JOB NO. OFF00000
DATE 00/00/00
DESIGNED
DRAWN
REVISED
CHECKED
FILE NAME PR_TYP.dgn

VERIFY SCALE Bar is one inch on original drawing. If not one inch on this sheet, adjust scale.

SHEET

SEQ.

MicroStation V8 User: 03952 Office:
pw:\\freese-pw.bentley.com:freese-pw-01\Documents\FNI - Texas\SRA22771 (Transportation)\2 Drawings\2.04 Infrastructure\2.04.02 Sheets\2.04.02.01 General\PR_TYP.dgn
Plotter: c:\pwworkdir\freese-pw.bentley.com_freese-pw-01\dms00001\PW_WORK\pw.pltg
Plot Scale: 10.000 ' / in.
Plot Date: Apr. 11, 2023 - 08:02:08 PM
Model: Default
Project: Freese and Nichols, Inc.

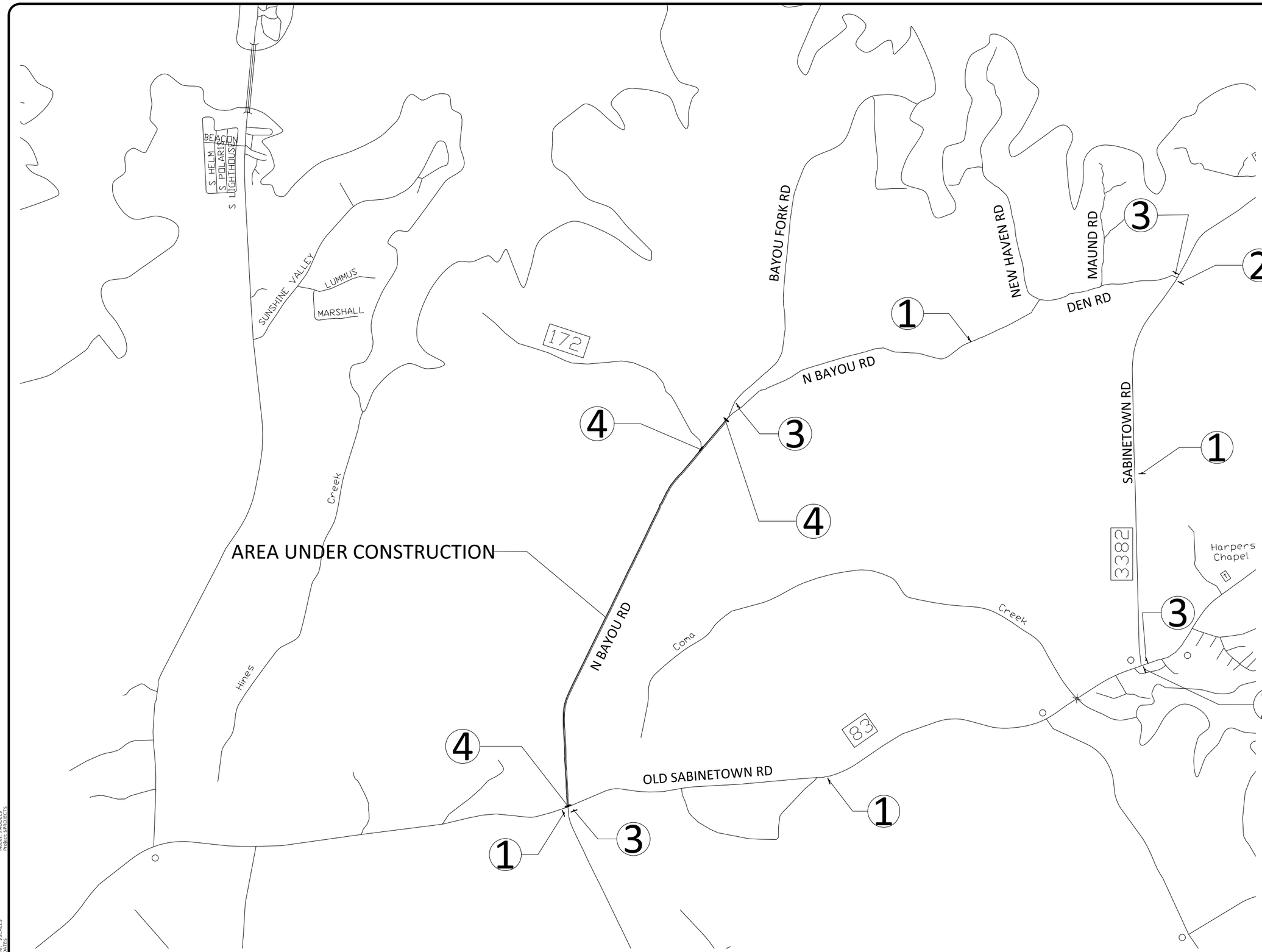

N BAYOU RD

DETOUR

SIGN NO. 1

N BAYOU RD

DETOUR

SIGN NO. 2

N BAYOU RD

DETOUR

SIGN NO. 3

ROAD CLOSED

W/ TY III BARRICADE

SIGN NO. 4

ISSUE FOR BID

FREESE AND NICHOLS, INC
TEXAS REGISTERED ENGINEERING FIRM F-2144

STATE OF TEXAS
COURTNEY I CUNNINGHAM
141398
LICENSED
PROFESSIONAL ENGINEER
04-11-2023

FREESE AND NICHOLS
801 Cherry Street, Suite 2800
Fort Worth, TX 76102
Phone - (817) 735-7300
Web - www.freese.com

SABINE RIVER AUTHORITY

PARK DEVELOPMENT PROJECT

N BAYOU RD DETOUR PLAN

NO.	ISSUES	BY	DATE

F&N JOB NO. OFF22771

DATE	00/00/00
DESIGNED	XXX
DRAWN	XXX
REVISED	XXX
CHECKED	XXX
FILE NAME	$FILE$

VERIFY SCALE Bar is one inch on original drawing. If not one inch on this sheet, adjust scale. 0 1

SHEET 1

SEQ. $--$

Office:$LOCATION$ $ACCOUNT$ Date:$DATE$ User:$USERNAME$ File:$FILE$

MicroStation V8 User: $USERNAME$ Office:$LOCATION$
$ACCOUNT$ $FILE$
Active: $TOOL$ $S
Plot Scale: $SCALE$
Date: $DATE$

Model: $MODEL$
Project: $PROJECT$

TYPICAL LOCATION OF CROSSROAD SIGNS

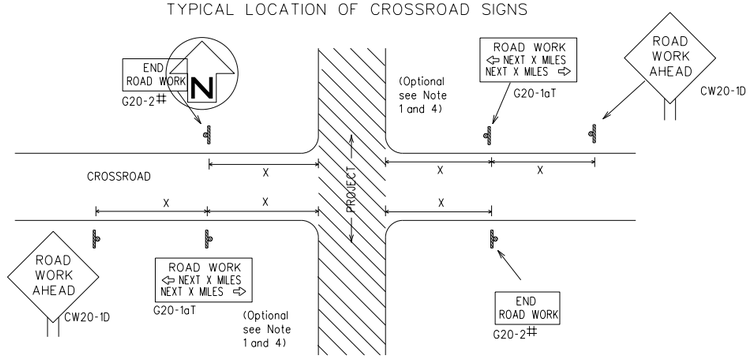

May be mounted on back of "ROAD WORK AHEAD"(CW20-1D) sign with approval of Engineer. (See note 2 below)

1. The typical minimum signing on a crossroad approach should be a "ROAD WORK AHEAD" (CW20-1D)sign and a (G20-2) "END ROAD WORK" sign, unless noted otherwise in plans.
2. The Engineer may use the reduced size 36" x 36" ROAD WORK AHEAD (CW20-1D) sign mounted back to back with the reduced size 36" x 18" "END ROAD WORK"(G20-2) sign on low volume crossroads (see Note 4 under "Typical Construction Warning Sign Size and Spacing"). See the "Standard Highway Sign Designs for Texas" manual for sign details. The Engineer may omit the advance warning signs on low volume crossroads. The Engineer will determine whether a road is low volume as per TMUTCD Part 5. This information shall be shown in the plans.
3. Based on existing field conditions, the Engineer/Inspector may require additional signs such as FLAGGER AHEAD, LOOSE GRAVEL, or other appropriate signs. When additional signs are required, these signs will be considered part of the minimum requirements. The Engineer/Inspector will determine the proper location and spacing of any sign not shown on the BC sheets, Traffic Control Plan sheets or the Work Zone Standard Sheets.
4. The "ROAD WORK NEXT X MILES"(G20-1aT)sign shall be required at high volume crossroads to advise motorists of the length of construction in either direction from the intersection. The Engineer will determine whether a roadway is considered high volume.
5. Additional traffic control devices may be shown elsewhere in the plans for higher volume crossroads.
6. When work occurs in the intersection area, appropriate traffic control devices, as shown elsewhere in the plans or as determined by the Engineer/Inspector, shall be in place.

T-INTERSECTION

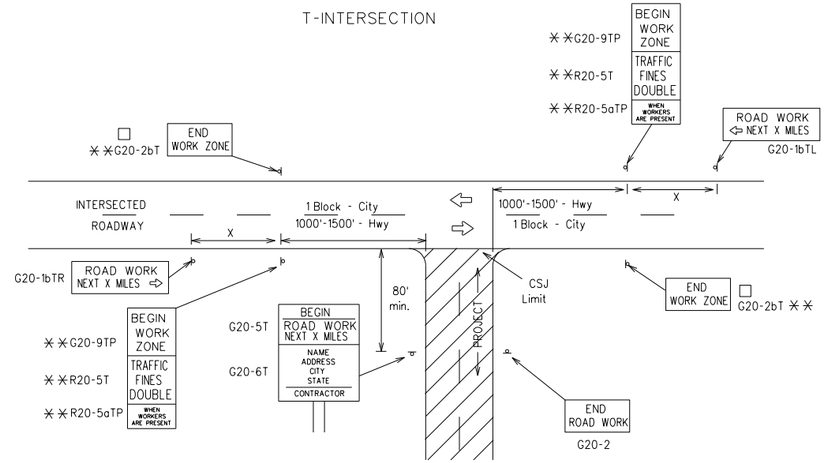

CSJ LIMITS AT T-INTERSECTION

1. The Engineer will determine the types and location of any additional traffic control devices, such as a flagger and accompanying signs, or other signs, that should be used when work is being performed at or near an intersection.
2. If construction closes the road at a T-intersection, the Contractor shall place the "CONTRACTOR NAME"(G20-6T) sign behind the Type 3 Barricades for the road closure (see BC(10) also). The "ROAD WORK NEXT X MILES" left arrow(G20-1bTL) and "ROAD WORK NEXT X MILES" right arrow (G20-1bTR)" signs shall be replaced by the detour signing called for in the plans.

TYPICAL CONSTRUCTION WARNING SIGN SIZE AND SPACING

1,5,6

SIZE

Sign Number or Series	Conventional Road	Expressway/ Freeway
CW20[4] CW21 CW22 CW23 CW25	48" x 48"	48" x 48"
CW1, CW2, CW7, CW8, CW9, CW11, CW14	36" x 36"	48" x 48"
CW3, CW4, CW5, CW6, CW8-3, CW10, CW12	48" x 48"	48" x 48"

SPACING

Posted Speed	Sign ✳ Spacing "X"
MPH	Feet (Apprx.)
30	120
35	160
40	240
45	320
50	400
55	500 [2]
60	600 [2]
65	700 [2]
70	800 [2]
75	900 [2]
80	1000 [2]
✳	✳ [3]

✳ For typical sign spacings on divided highways, expressways and freeways, see Part 6 of the "Texas Manual on Uniform Traffic Control Devices" (TMUTCD) typical application diagrams or TCP Standard Sheets.

✳ Minimum distance from work area to first Advance Warning sign nearest the work area and/or distance between each additional sign.

GENERAL NOTES

1. Special or larger size signs may be used as necessary.
2. Distance between signs should be increased as required to have 1500 feet advance warning.
3. Distance between signs should be increased as required to have 1/2 mile or more advance warning.
4. 36" x 36" "ROAD WORK AHEAD" (CW20-1D)signs may be used on low volume crossroads at the discretion of the Engineer as per TMUTCD Part 5. See Note 2 under "Typical Location of Crossroad Signs".
5. Only diamond shaped warning sign sizes are indicated.
6. See sign size listing in "TMUTCD", Sign Appendix or the "Standard Highway Sign Designs for Texas" manual for complete list of available sign design sizes.

WORK AREAS IN MULTIPLE LOCATIONS WITHIN CSJ LIMITS

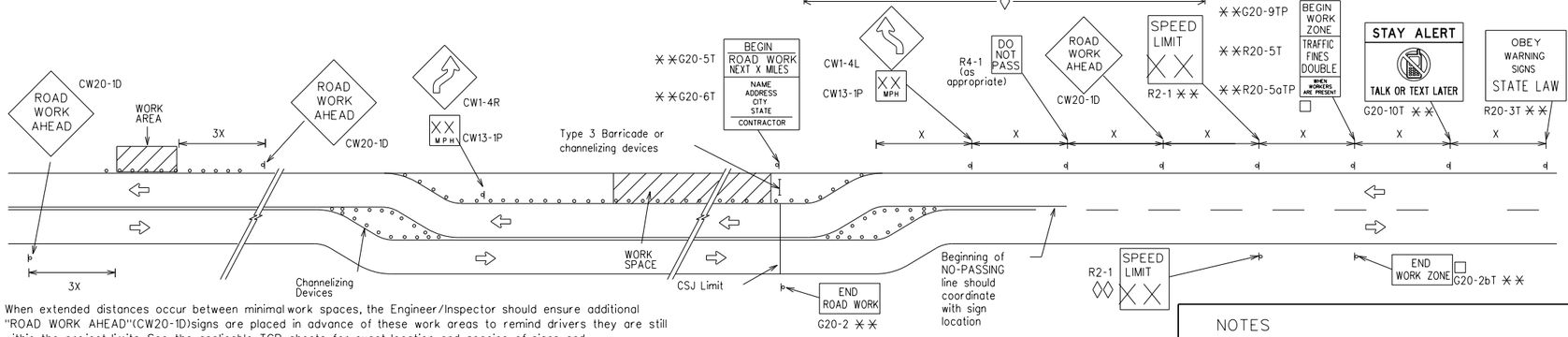

When extended distances occur between minimal work spaces, the Engineer/Inspector should ensure additional "ROAD WORK AHEAD"(CW20-1D)signs are placed in advance of these work areas to remind drivers they are still within the project limits. See the applicable TCP sheets for exact location and spacing of signs and channelizing devices.

SAMPLE LAYOUT OF SIGNING FOR WORK BEGINNING DOWNSTREAM OF THE CSJ LIMITS

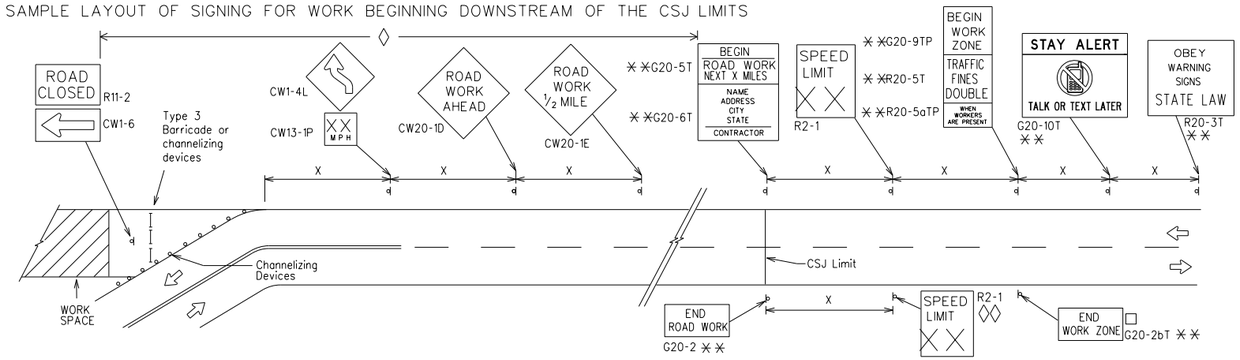

NOTES

The Contractor shall determine the appropriate distance to be placed on the G20-1 series signs and "BEGIN ROAD WORK NEXT X MILES"(G20-5T)sign for each specific project. This distance shall replace the "X" and shall be rounded to the nearest whole mile with the approval of the Engineer. No decimals shall be used.

□ The "BEGIN WORK ZONE"(G20-9TP) and "END WORK ZONE" (G20-2bT) shall be used as shown on the sample layout when advance signs are required outside the CSJ Limits. They inform the motorist of entering or leaving a part of the work zone lying outside the CSJ Limits where traffic fines may double if workers are present.

✳✳ CSJ limit signing is required for highway construction and maintenance work, with the exception of mobile operations.

◊ Area for placement of "ROAD WORK AHEAD" (CW20-1D)sign and other signs or devices as called for on the Traffic Control Plan.

◊◊ Contractor will install a regulatory speed limit sign at the end of the work zone.

LEGEND

⊢⊣	Type 3 Barricade
○ ○ ○	Channelizing Devices
▬	Sign
X	See Typical Construction Warning Sign Size and Spacing chart or the TMUTCD for sign spacing requirements.

FREESE AND NICHOLS, INC.
TEXAS REGISTERED ENGINEERING FIRM F-2144
STATE OF TEXAS
COURTNEY I CUNNINGHAM
141398
LICENSED PROFESSIONAL ENGINEER
04-11-2023
FREESE AND NICHOLS
801 Cherry Street, Suite 2800
Fort Worth, TX 76102
Phone - (817) 735-7300
Web - www.freese.com

SABINE RIVER AUTHORITY TOLEDO BEND FISHING TOURNAMENT SITE

ROADWAY AND DRAINAGE ENGINEERING DESIGN

TRAFFIC CONTROL DETAILS 01

NO.	ISSUES	BY	DATE

F&N JOB NO. OFF00000
DATE 00/00/00
DESIGNED
DRAWN
REVISED
CHECKED
FILE NAME TCP01

VERIFY SCALE Bar is one inch on original drawing. If not one inch on this sheet, adjust scale.

SHEET

SEQ.

MicroStation V8 User: 03952 Office: pw:\\freese-pw.bentley.com:freese-pw-01\Documents\FNI - Texas\SRA22771 (Transportation)\2 Drawings\2.04 Infrastructure\2.04.02 Sheets\2.04.02.13 Standards\Traffic Standards\TCP01
Plotter: c:\pwworking\freese-pw-01\d0952\dms00001\TCP01.pltcfg Model: Default
Plot Scale: 2.1 ' / In. Project: Freese and Nichols, Inc.
Date Mod: 21, 2023 - 12:30:34 PM
Office: Date:Mar. 21, 2023 - 12:30:34 PM User:03952 File:pw:\\freese-pw.bentley.com:freese-pw-01\Documents\FNI - Texas\SRA22771 (Transportation)\2 Drawings\2.04 Infrastructure\2.04.02 Sheets\2.04.02.13 Standards\Traffic Standards\TCP01

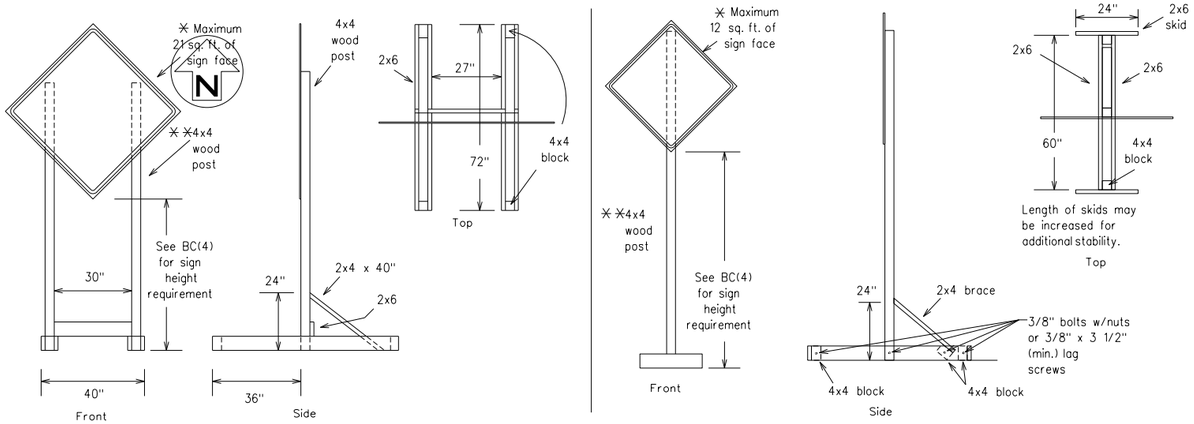

SKID MOUNTED WOOD SIGN SUPPORTS

✳ LONG/INTERMEDIATE TERM STATIONARY - PORTABLE SKID MOUNTED SIGN SUPPORTS

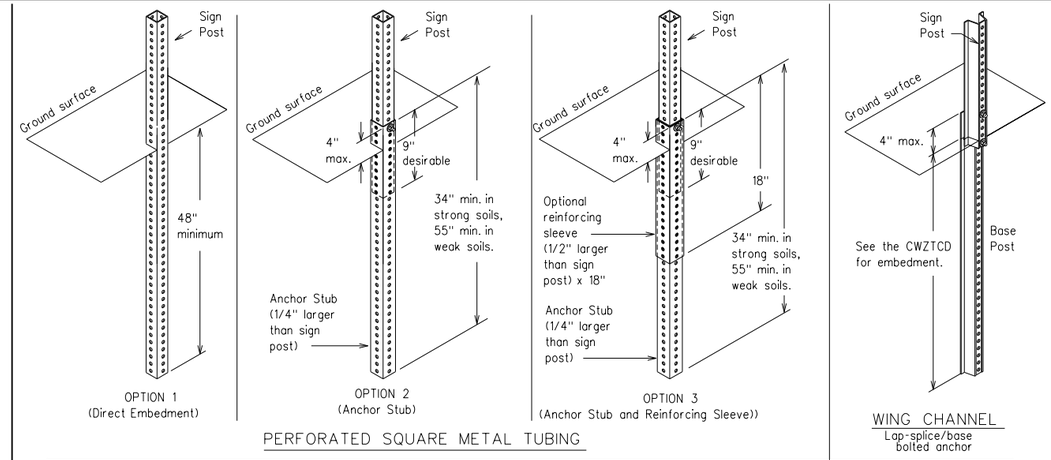

GROUND MOUNTED SIGN SUPPORTS

Refer to the CWZTCD and the manufacturer's installation procedure for each type sign support.
The maximum sign square footage shall adhere to the manufacturer's recommendation.
Two post installations can be used for larger signs.

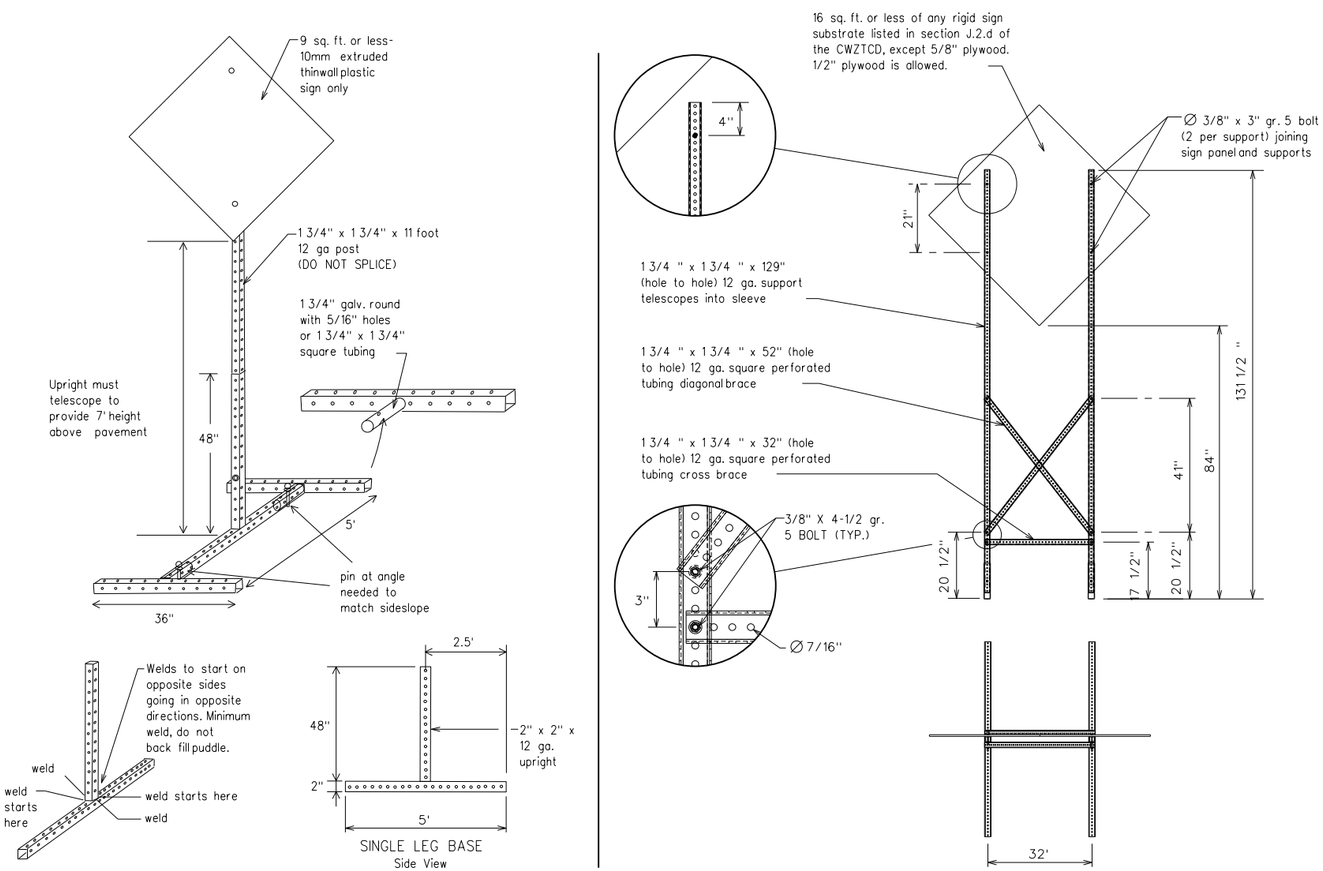

SKID MOUNTED PERFORATED SQUARE STEEL TUBING SIGN SUPPORTS

✳ LONG/INTERMEDIATE TERM STATIONARY - PORTABLE SKID MOUNTED SIGN SUPPORTS

WEDGE ANCHORS

Both steel and plastic Wedge Anchor Systems as shown on the SMD Standard Sheets may be used as temporary sign supports for signs up to 10 square feet of sign face. They may be set in concrete or in sturdy soils if approved by the Engineer. (See web address for "Traffic Engineering Standard Sheets" on BC(1)).

OTHER DESIGNS

MORE DETAILS OF APPROVED LONG/INTERMEDIATE AND SHORT TERM SUPPORTS CAN BE FOUND ON THE CWZTCD LIST. SEE BC(1) FOR WEBSITE LOCATION.

GENERAL NOTES

1. Nails may be used in the assembly of wooden sign supports, but 3/8" bolts with nuts or 3/8" x 3 1/2" lag screws must be used on every joint for final connection.
2. No more than 2 sign posts shall be placed within a 7 ft. circle, except for specific materials noted on the CWZTCD List.
3. When project is completed, all sign supports and foundations shall be removed from the project site. This will be considered subsidiary to Item 502.

✳ See BC(4) for definition of "Work Duration."

✳✳ Wood sign posts MUST be one piece. Splicing will NOT be allowed. Posts shall be painted white.

☐ See the CWZTCD for the type of sign substrate that can be used for each approved sign support.

FREESE AND NICHOLS, INC.
TEXAS REGISTERED ENGINEERING FIRM F-2144
STATE OF TEXAS
COURTNEY I CUNNINGHAM
141398
LICENSED PROFESSIONAL ENGINEER
04-11-2023
FREESE AND NICHOLS
801 Cherry Street, Suite 2800
Fort Worth, Texas 76102
Phone - (817) 735-7300
Web - www.freese.com

SABINE RIVER AUTHORITY TOLEDO BEND FISHING TOURNAMENT SITE
ROADWAY AND DRAINAGE ENGINEERING DESIGN

TRAFFIC CONTROL DETAILS 02

NO.	ISSUES	BY	DATE

F&N JOB NO. OFF00000
DATE 00/00/00
DESIGNED
DRAWN
REVISED
CHECKED
FILE NAME TCP02

VERIFY SCALE Bar is one inch on original drawing. If not one inch on this sheet, adjust scale.

SHEET

SEQ.

MicroStation V8 User: 03952 Office:
pw:\\freese-pw.bentley.com:freese-pw-01\Documents\FNI - Texas\SRA22771 (Transportation)\2 Drawings\2.04 Infrastructure\2.04.02 Sheets\2.04.02.13 Standards\Traffic Standards\TCP02
Plotter: c:\pwwork\freese-pw.bentley.com\dms03952\TCP02.pltg Model: Default
Plot Scale: 2.1" = 1'-0" Project: Freese and Nichols, Inc.
Date: Mar. 21, 2023 - 12:31:49 PM

GENERAL NOTES

1. For long term stationary work zones on freeways, drums shall be used as the primary channelizing device.
2. For intermediate term stationary work zones on freeways, drums should be used as the primary channelizing device but may be replaced in tangent sections by vertical panels, or 42" two-piece cones. In tangent sections, one-piece cones may be used with the approval of the Engineer but only if personnel are present on the project at all times to maintain the cones in proper position and location.
3. For short term stationary work zones on freeways, drums are the preferred channelizing device but may be replaced in tapers, transitions and tangent sections by vertical panels, two-piece cones or one-piece cones as approved by the Engineer.
4. Drums and all related items shall comply with the requirements of the current version of the "Texas Manual on Uniform Traffic Control Devices" (TMUTCD) and the "Compliant Work Zone Traffic Control Devices List" (CWZTCD).
5. Drums, bases, and related materials shall exhibit good workmanship and shall be free from objectionable marks or defects that would adversely affect their appearance or serviceability.
6. The Contractor shall have a maximum of 24 hours to replace any plastic drums identified for replacement by the Engineer/Inspector. The replacement device must be an approved device.

GENERAL DESIGN REQUIREMENTS

Pre-qualified plastic drums shall meet the following requirements:

1. Plastic drums shall be a two-piece design: the "body" of the drum shall be the top portion and the "base" shall be the bottom.
2. The body and base shall lock together in such a manner that the body separates from the base when impacted by a vehicle traveling at a speed of 20 MPH or greater but prevents accidental separation due to normal handling and/or air turbulence created by passing vehicles.
3. Plastic drums shall be constructed of lightweight flexible, and deformable materials. The Contractor shall NOT use metal drums or single piece plastic drums as channelization devices or sign supports.
4. Drums shall present a profile that is a minimum of 18 inches in width at the 36 inch height when viewed from any direction. The height of drum unit (body installed on base) shall be a minimum of 36 inches and a maximum of 42 inches.
5. The top of the drum shall have a built-in handle for easy pickup and shall be designed to drain water and not collect debris. The handle shall have a minimum of two widely spaced 9/16 inch diameter holes to allow attachment of a warning light, warning reflector unit or approved compliant sign.
6. The exterior of the drum body shall have a minimum of four alternating orange and white retroreflective circumferential stripes not less than 4 inches nor greater than 8 inches in width. Any non-reflectorized space between any two adjacent stripes shall not exceed 2 inches in width.
7. Bases shall have a maximum width of 36 inches, a maximum height of 4 inches, and a minimum of two footholds of sufficient size to allow base to be held down while separating the drum body from the base.
8. Plastic drums shall be constructed of ultra-violet stabilized, orange, high-density polyethylene (HDPE) or other approved material.
9. Drum body shall have a maximum unballasted weight of 11 lbs.
10. Drum and base shall be marked with manufacturer's name and model number.

RETROREFLECTIVE SHEETING

1. The stripes used on drums shall be constructed of sheeting meeting the color and retroreflectivity requirements of Departmental Materials Specification DMS-8300, "Sign Face Materials." Type A or Type B reflective sheeting shall be supplied unless otherwise specified in the plans.
2. The sheeting shall be suitable for use on and shall adhere to the drum surface such that, upon vehicular impact, the sheeting shall remain adhered in-place and exhibit no delaminating, cracking, or loss of retroreflectivity other than that loss due to abrasion of the sheeting surface.

BALLAST

1. Unballasted bases shall be large enough to hold up to 50 lbs. of sand. This base, when filled with the ballast material, should weigh between 35 lbs (minimum) and 50 lbs (maximum). The ballast may be sand in one to three sandbags separate from the base, sand in a sand-filled plastic base, or other ballasting devices as approved by the Engineer. Stacking of sandbags will be allowed, however height of sandbags above pavement surface may not exceed 12 inches.
2. Bases with built-in ballast shall weigh between 40 lbs. and 50 lbs. Built-in ballast can be constructed of an integral crumb rubber base or a solid rubber base.
3. Recycled truck tire sidewalls may be used for ballast on drums approved for this type of ballast on the CWZTCD list.
4. The ballast shall not be heavy objects, water, or any material that would become hazardous to motorists, pedestrians, or workers when the drum is struck by a vehicle.
5. When used in regions susceptible to freezing, drums shall have drainage holes in the bottoms so that water will not collect and freeze becoming a hazard when struck by a vehicle.
6. Ballast shall not be placed on top of drums.
7. Adhesives may be used to secure base of drums to pavement.

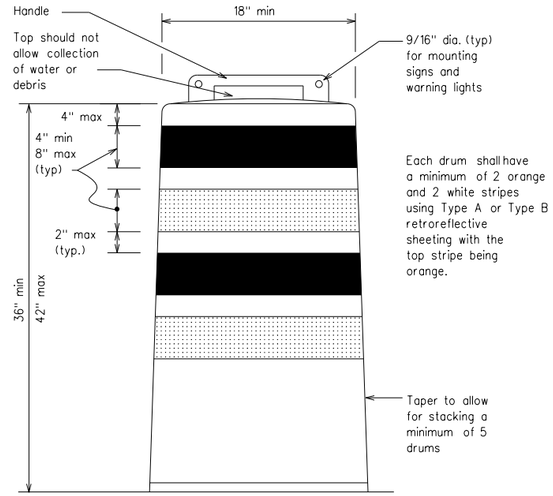

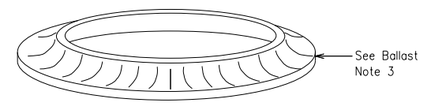

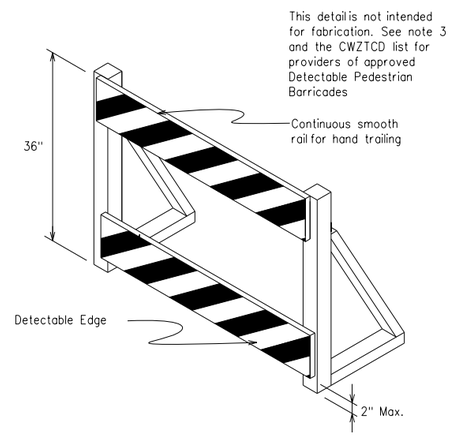

DETECTABLE PEDESTRIAN BARRICADES

1. When existing pedestrian facilities are disrupted, closed, or relocated in a TTC zone, the temporary facilities shall be detectable and include accessibility features consistent with the features present in the existing pedestrian facility. Refer to WZ(BTS-2) for Pedestrian Control requirements for Sidewalk Diversions, Sidewalk Detours and Crosswalk Closures.
2. Where pedestrians with visual disabilities normally use the closed sidewalk, a Detectable Pedestrian Barricade shall be placed across the full width of the closed sidewalk instead of a Type 3 Barricade.
3. Detectable pedestrian barricades similar to the one pictured above, longitudinal channelizing devices, some concrete barriers, and wood or chain link fencing with a continuous detectable edging can satisfactorily delineate a pedestrian path.
4. Tape, rope, or plastic chain strung between devices are not detectable, do not comply with the design standards in the "Americans with Disabilities Act Accessibility Guidelines (ADAAG)" and should not be used as a control for pedestrian movements.
5. Warning lights shall not be attached to detectable pedestrian barricades.
6. Detectable pedestrian barricades should use 8" nominal barricade rails as shown on BC(10) provided that the top rail provides a smooth continuous rail suitable for hand trailing with no splinters, burrs, or sharp edges.

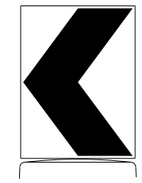

18" x 24" Sign
(Maximum Sign Dimension)
Chevron CW1-8, Opposing Traffic Lane Divider, Driveway sign D70a, Keep Right R4 series or other signs as approved by Engineer

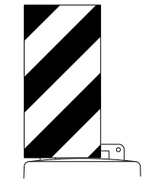

12" x 24"
Vertical Panel
mount with diagonals sloping down towards travel way

Plywood, Aluminum or Metal sign substrates shall NOT be used on plastic drums

SIGNS, CHEVRONS, AND VERTICAL PANELS MOUNTED ON PLASTIC DRUMS

1. Signs used on plastic drums shall be manufactured using substrates listed on the CWZTCD.
2. Chevrons and other work zone signs with an orange background shall be manufactured with Type B or Type C Orange FL sheeting meeting the color and retroreflectivity requirements of DMS-8300, "Sign Face Material," unless otherwise specified in the plans.
3. Vertical Panels shall be manufactured with orange and white sheeting meeting the requirements of DMS-8300 Type A or Type B. Diagonal stripes on Vertical Panels shall slope down toward the intended traveled lane.
4. Other sign messages (text or symbolic) may be used as approved by the Engineer. Sign dimensions shall not exceed 18 inches in width or 24 inches in height, except for the R9 series signs discussed in note 8 below.
5. Signs shall be installed using a 1/2 inch bolt (nominal) and nut, two washers, and one locking washer for each connection.
6. Mounting bolts and nuts shall be fully engaged and adequately torqued. Bolts should not extend more than 1/2 inch beyond nuts.
7. Chevrons may be placed on drums on the outside of curves, on merging tapers or on shifting tapers. When used in these locations, they may be placed on every drum or spaced not more than on every third drum. A minimum of three (3) should be used at each location called for in the plans.
8. R9-9, R9-10, R9-11 and R9-11a Sidewalk Closed signs which are 24 inches wide may be mounted on plastic drums, with approval of the Engineer.

FREESE AND NICHOLS, INC.
TEXAS REGISTERED ENGINEERING FIRM F-2144
STATE OF TEXAS
COURTNEY L CUNNINGHAM
141398
LICENSED PROFESSIONAL ENGINEER
04-11-2023
FREESE AND NICHOLS
801 Cherry Street, Suite 2800
Fort Worth, TX 76102
Phone - (817) 735-7300
Web - www.freese.com

SABINE RIVER AUTHORITY TOLEDO BEND FISHING TOURNAMENT SITE
ROADWAY AND DRAINAGE ENGINEERING DESIGN
TRAFFIC CONTROL DETAILS 03

F&N JOB NO.	OFF00000
DATE	00/00/00
DESIGNED	
DRAWN	
REVISED	
CHECKED	
FILE NAME	TCP03

NO.	ISSUES	BY	DATE

VERIFY SCALE Bar is one inch on original drawing. If not one inch on this sheet, adjust scale.
0 1

SHEET

SEQ.

MicroStation V8 User: 03952 Office:
pw:\\freese-pw.bentley.com:freese-pw-01\Documents\FNI - Texas\SRA22771 (Transportation)\2 Drawings\2.04 Infrastructure\2.04.02 Sheets\2.04.02.13 Standards\Traffic Standards\TCP03
Plotter: c:\pwwork\pw01\freese-pw.bentley.com\d0952\plotters\Default.pltcfg
Model: Default
Plot Scale: 2.1 ' / In.
Project: Freese and Nichols, Inc.
Date: Mar. 21, 2023 12:20 PM

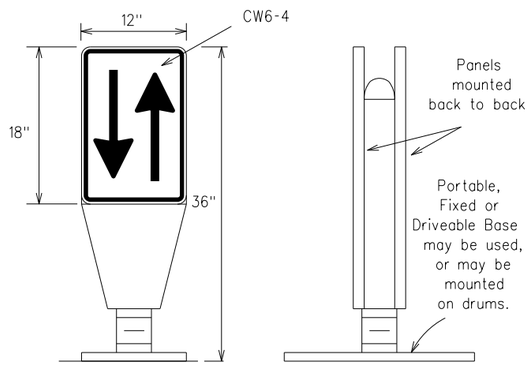

1. Opposing Traffic Lane Dividers (OTLD) are delineation devices designed to convert a normal one-way roadway section to two-way operation. OTLD's are used on temporary centerlines. The upward and downward arrows on the sign's face indicate the direction of traffic on either side of the divider. The base is secured to the pavement with an adhesive or rubber weight to minimize movement caused by a vehicle impact or wind gust.
2. The OTLD may be used in combination with 42" cones or VPs.
3. Spacing between the OTLD shall not exceed 500 feet. 42" cones or VPs placed between the OTLD's should not exceed 100 foot spacing.
4. The OTLD shall be orange with a black non-reflective legend. Sheeting for the OTLD shall be retroreflective Type B or Type C conforming to Departmental Material Specification DMS-8300, unless noted otherwise. The legend shall meet the requirements of DMS-8300.

OPPOSING TRAFFIC LANE DIVIDERS (OTLD)

GENERAL NOTES

1. Work Zone channelizing devices illustrated on this sheet may be installed in close proximity to traffic and are suitable for use on high or low speed roadways. The Engineer/Inspector shall ensure that spacing and placement is uniform and in accordance with the "Texas Manual on Uniform Traffic Control Devices" (TMUTCD).
2. Channelizing devices shown on this sheet may have a driveable, fixed or portable base. The requirement for self-righting channelizing devices must be specified in the General Notes or other plan sheets.
3. Channelizing devices on self-righting supports should be used in work zone areas where channelizing devices are frequently impacted by errant vehicles or vehicle related wind gusts making alignment of the channelizing devices difficult to maintain. Locations of these devices shall be detailed elsewhere in the plans. These devices shall conform to the TMUTCD and the "Compliant Work Zone Traffic Control Devices List" (CWZTCD).
4. The Contractor shall maintain devices in a clean condition and replace damaged, nonreflective, faded, or broken devices and bases as required by the Engineer/Inspector. The Contractor shall be required to maintain proper device spacing and alignment.
5. Portable bases shall be fabricated from virgin and/or recycled rubber. The portable bases shall weigh a minimum of 30 lbs.
6. Pavement surfaces shall be prepared in a manner that ensures proper bonding between the adhesives, the fixed mount bases and the pavement surface. Adhesives shall be prepared and applied according to the manufacturer's recommendations.
7. The installation and removal of channelizing devices shall not cause detrimental effects to the final pavement surfaces, including pavement surface discoloration or surface integrity. Driveable bases shall not be permitted on final pavement surfaces. The Engineer/Inspector shall approve all application and removal procedures of fixed bases.

Posted Speed	Formula	Minimum Desirable Taper Lengths ✳✳			Suggested Maximum Spacing of Channelizing Devices	
		10' Offset	11' Offset	12' Offset	On a Taper	On a Tangent
30	$L = \frac{WS^2}{60}$	150'	165'	180'	30'	60'
35		205'	225'	245'	35'	70'
40		265'	295'	320'	40'	80'
45	L = WS	450'	495'	540'	45'	90'
50		500'	550'	600'	50'	100'
55		550'	605'	660'	55'	110'
60		600'	660'	720'	60'	120'
65		650'	715'	780'	65'	130'
70		700'	770'	840'	70'	140'
75		750'	825'	900'	75'	150'
80		800'	880'	960'	80'	160'

✳✳ Taper lengths have been rounded off.
L=Length of Taper (FT.) W=Width of Offset (FT.)
S=Posted Speed (MPH)

SUGGESTED MAXIMUM SPACING OF CHANNELIZING DEVICES AND MINIMUM DESIRABLE TAPER LENGTHS

FREESE AND NICHOLS, INC.
TEXAS REGISTERED ENGINEERING FIRM F-2144

STATE OF TEXAS
COURTNEY I CUNNINGHAM
141398
LICENSED PROFESSIONAL ENGINEER
04-11-2023

FREESE AND NICHOLS
801 Cherry Street, Suite 2800
Fort Worth, TX 76102
Phone - (817) 735-7300
Web - www.freese.com

SABINE RIVER AUTHORITY TOLEDO BEND FISHING TOURNAMENT SITE
ROADWAY AND DRAINAGE ENGINEERING DESIGN
TRAFFIC CONTROL DETAILS 04

F&N JOB NO. OFF00000
DATE 00/00/00
DESIGNED
DRAWN
REVISED
CHECKED
FILE NAME TCP04

NO. | ISSUES | BY | DATE

VERIFY SCALE Bar is one inch on original drawing. If not one inch on this sheet, adjust scale.
0 1

SHEET
SEQ.

MicroStation V8 User:03952 Office:
pw:\\freese-pw.bentley.com:freese-pw-01\Documents\FNI - Texas\SRA22771 (Transportation)\2 Drawings\2.04 Infrastructure\2.04.02 Sheets\2.04.02.13 Standards\Traffic Standards\TCP04
Plotter: Canon\ipg\Freese-Canon.pltcfg,Canon\ipg\Freese-Canon.pltcfg
Plot Scale: 2.1 / 1in.
Date: Mar. 21, 2023 - 12:34:15 PM
Model: Default
Project: Freese and Nichols, Inc.

TYPE 3 BARRICADES

1. Refer to the Compliant Work Zone Traffic Control Devices List (CWZTCD) for details of the Type 3 Barricades and a list of all materials used in the construction of Type 3 Barricades.
2. Type 3 Barricades shall be used at each end of construction projects closed to all traffic.
3. Barricades extending across a roadway should have stripes that slope downward in the direction toward which traffic must turn in detouring. When both right and left turns are provided, the chevron striping may slope downward in both directions from the center of the barricade. Where no turns are provided at a closed road, striping should slope downward in both directions toward the center of roadway.
4. Striping of rails, for the right side of the roadway, should slope downward to the left. For the left side of the roadway, striping should slope downward to the right.
5. Identification markings may be shown only on the back of the barricade rails. The maximum height of letters and/or company logos used for identification shall be 1".
6. Barricades shall not be placed parallel to traffic unless an adequate clear zone is provided.
7. Warning lights shall NOT be installed on barricades.
8. Where barricades require the use of weights to keep from turning over, the use of sandbags with dry, cohesionless sand is recommended. The sandbags will be tied shut to keep the sand from spilling and to maintain a constant weight. Sand bags shall not be stacked in a manner that covers any portion of a barricade rails reflective sheeting. Rock, concrete, iron, steel or other solid objects will NOT be permitted. Sandbags should weigh a minimum of 35 lbs and a maximum of 50 lbs. Sandbags shall be made of a durable material that tears upon vehicular impact. Rubber (such as tire inner tubes) shall not be used for sandbags. Sandbags shall only be placed along or upon the base supports of the device and shall not be suspended above ground level or hung with rope, wire, chains or other fasteners.
9. Sheeting for barricades shall be retroreflective Type A or Type B conforming to Departmental Material Specification DMS-8300 unless otherwise noted.

Barricades shall NOT be used as a sign support.

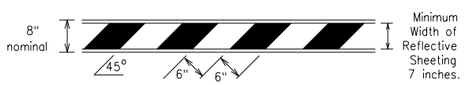

TYPICAL STRIPING DETAIL FOR BARRICADE RAIL

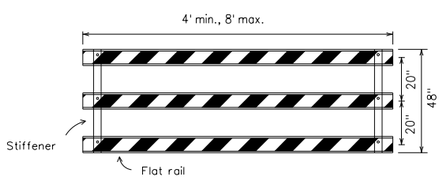

Stiffener may be inside or outside of support, but no more than 2 stiffeners shall be allowed on one barricade.

TYPICAL PANEL DETAIL
FOR SKID OR POST TYPE BARRICADES

Each roadway of a divided highway shall be barricaded in the same manner.

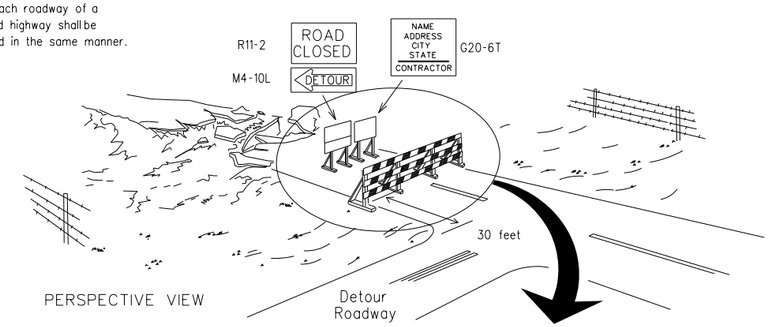

PERSPECTIVE VIEW

The three rails on Type 3 barricades shall be reflectorized orange and reflective white stripes on one side facing one-way traffic and both sides for two-way traffic.
Barricade striping should slant downward in the direction of detour.

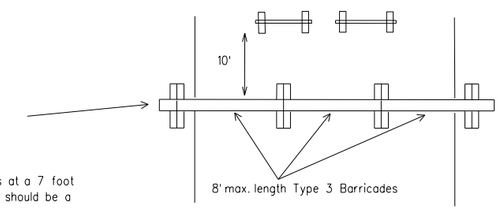

PLAN VIEW

1. Signs should be mounted on independent supports at a 7 foot mounting height in center of roadway. The signs should be a minimum of 10 feet behind Type 3 Barricades.
2. Advance signing shall be as specified elsewhere in the plans.

TYPE 3 BARRICADE (POST AND SKID) TYPICAL APPLICATION

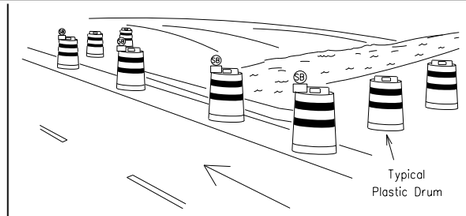

PERSPECTIVE VIEW

1. Where positive redirectional capability is provided, drums may be omitted.
2. Plastic construction fencing may be used with drums for safety as required in the plans.
3. Vertical Panels on flexible support may be substituted for drums when the shoulder width is less than 4 feet.
4. When the shoulder width is greater than 12 feet, steady-burn lights may be omitted if drums are used.
5. Drums must extend the length of the culvert widening.

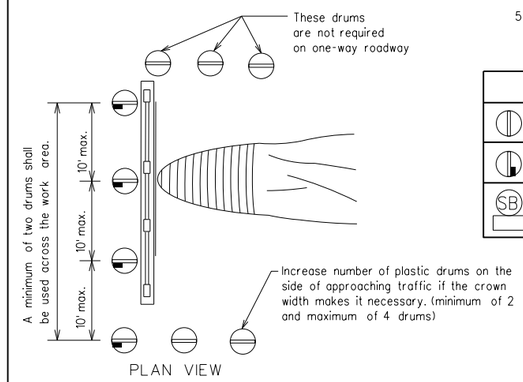

PLAN VIEW

LEGEND	
	Plastic drum
	Plastic drum with steady burn light or yellow warning reflector
SB	Steady burn warning light or yellow warning reflector

CULVERT WIDENING OR OTHER ISOLATED WORK WITHIN THE PROJECT LIMITS

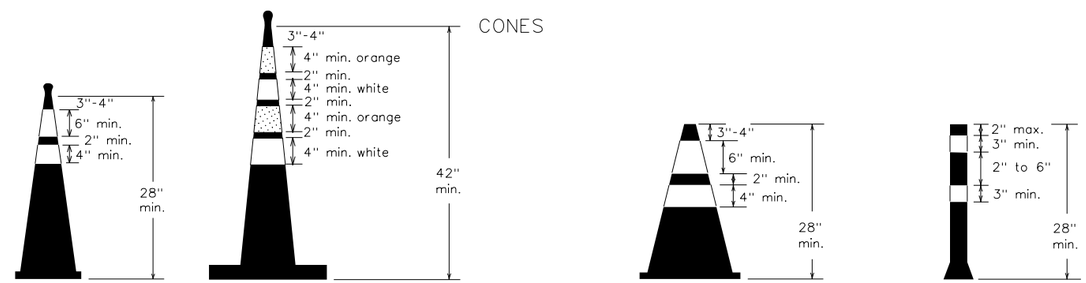

Two-Piece cones

One-Piece cones

Tubular Marker

28" Cones shall have a minimum weight of 9 1/2 lbs.

42" 2-piece cones shall have a minimum weight of 30 lbs. including base.

1. Traffic cones and tubular markers shall be predominantly orange, and meet the height and weight requirements shown above.
2. One-piece cones have the body and base of the cone molded in one consolidated unit. Two-piece cones have a cone shaped body and a separate rubber base, or ballast, that is added to keep the device upright and in place.
3. Two-piece cones may have a handle or loop extending up to 8" above the minimum height shown, in order to aid in retrieving the device.
4. Cones or tubular markers shall have white or white and orange reflective bands as shown above. The reflective bands shall have a smooth, sealed outer surface and meet the requirements of Departmental Material Specification DMS-8300 Type A or Type B.
5. 28" cones and tubular markers are generally suitable for short duration and short-term stationary work as defined on BC(4). These should not be used for intermediate-term or long-term stationary work unless personnel is on-site to maintain them in their proper upright position.
6. 42" two-piece cones, vertical panels or drums are suitable for all work zone durations.
7. Cones or tubular markers used on each project should be of the same size and shape.

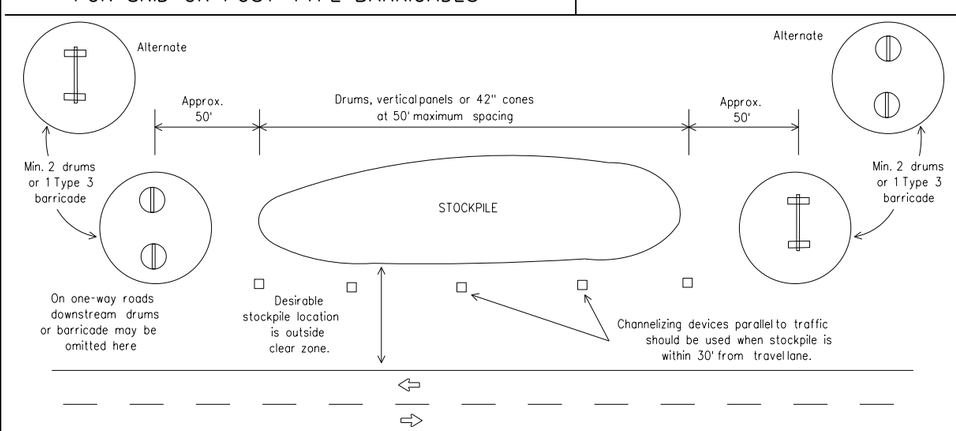

TRAFFIC CONTROL FOR MATERIAL STOCKPILES

FREESE AND NICHOLS, INC.
TEXAS REGISTERED ENGINEERING FIRM F-2144

STATE OF TEXAS
COURTNEY I CUNNINGHAM
141398
LICENSED PROFESSIONAL ENGINEER
04-11-2023

FREESE AND NICHOLS
801 Cherry Street, Suite 2800
Fort Worth, Texas 76102
Phone - (817) 735-7300
Web - www.freese.com

SABINE RIVER AUTHORITY TOLEDO BEND FISHING TOURNAMENT SITE
ROADWAY AND DRAINAGE ENGINEERING DESIGN
TRAFFIC CONTROL DETAILS 04

NO.	ISSUES	BY	DATE

F&N JOB NO. OFF00000
DATE 00/00/00
DESIGNED
DRAWN
REVISED
CHECKED
FILE NAME
TCP05

VERIFY SCALE Bar is one inch on original drawing. If not one inch on this sheet, adjust scale.
0 1

SHEET
SEQ.

MicroStation V8 User: 03952 Office: pw:\\freese-pw.bentley.com:freese-pw-01\Documents\FNI - Texas\SRA22771 (Transportation)\2 Drawings\2.04 Infrastructure\2.04.02 Sheets\2.04.02.13 Standards\Traffic Standards\TCP05
Plotter: c:\pwworking\pw-cache\pw-cache\bentley.com\freese-pw-01\Documents\FNI - Texas\SRA22771 (Transportation)\2 Drawings\2.04 Infrastructure\2.04.02 Sheets\2.04.02.13 Standards\Traffic Standards\TCP05.pltcfg
Plot Scale: 2.1 ' / in. Model: Default
Date: Mar. 21, 2023 - 12:35:07 PM Plotted: freese and Nichols, Inc.

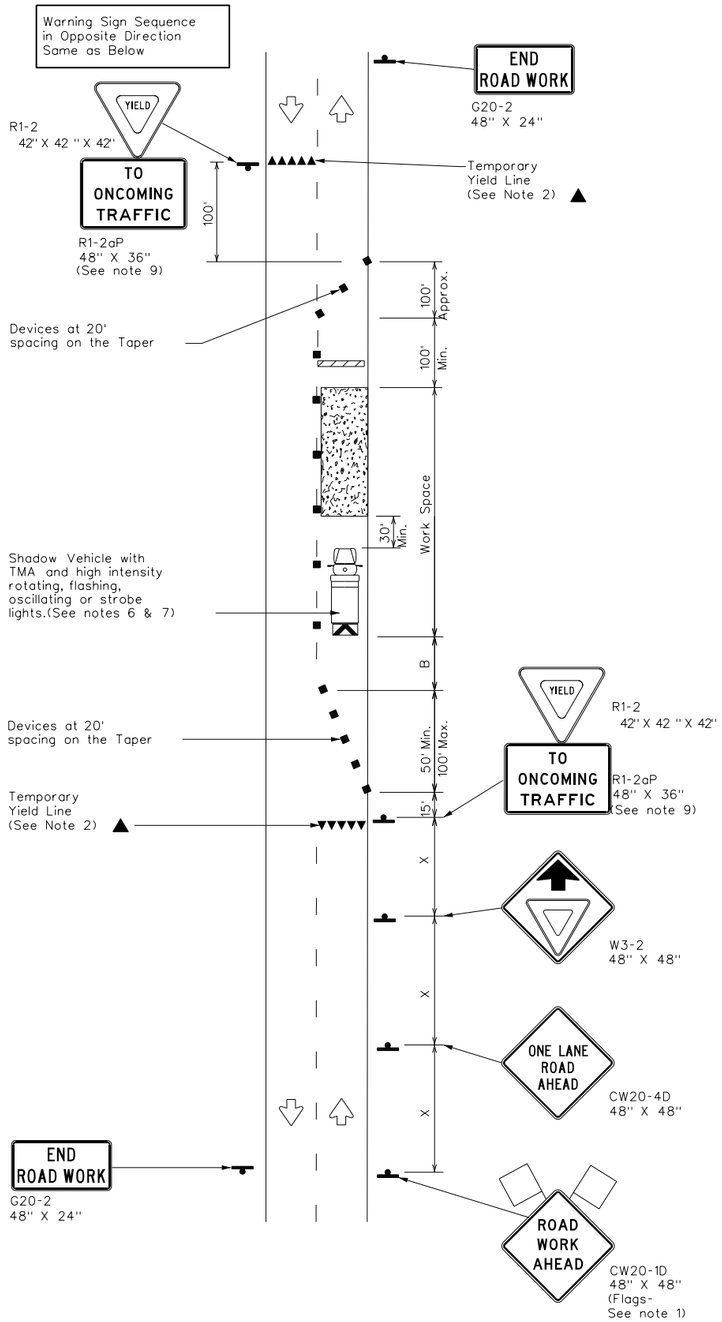

TCP (2-2a)

2-LANE ROADWAY WITHOUT PAVED SHOULDERS

ONE LANE TWO-WAY

CONTROL WITH YIELD SIGNS

(Less than 2000 ADT - See Note 9)

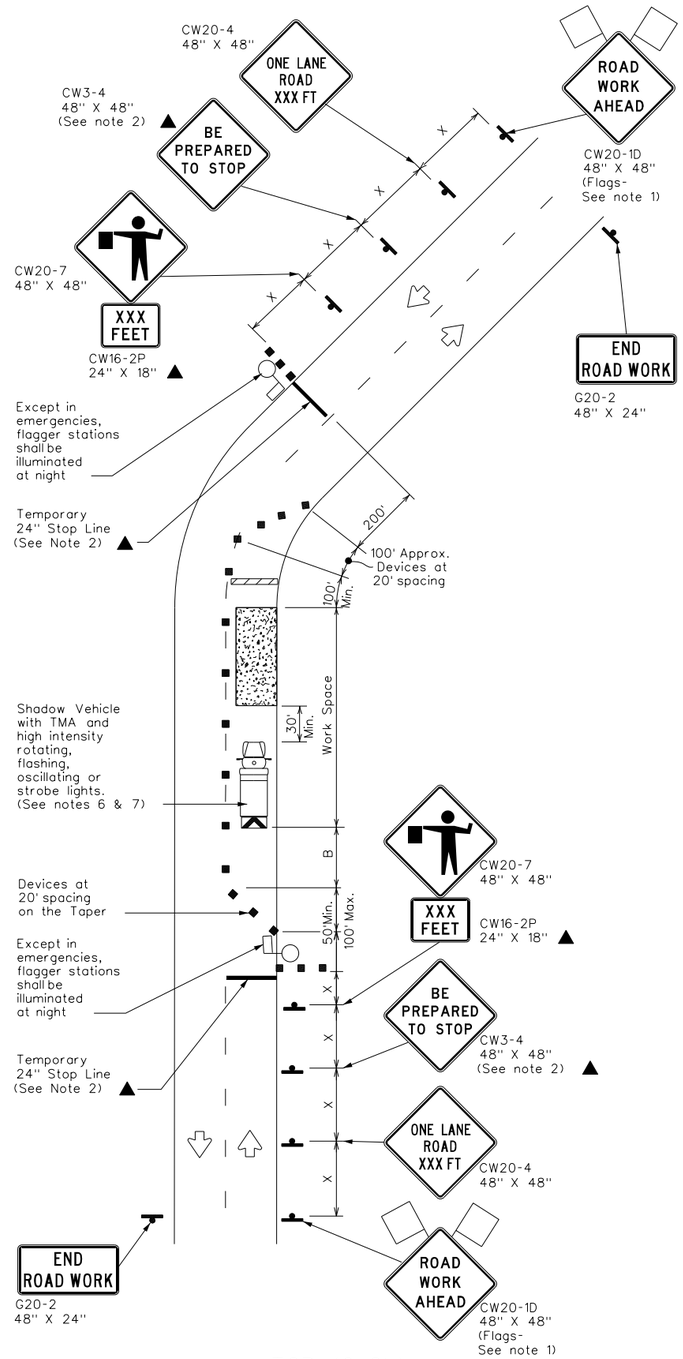

TCP (2-2b)

2-LANE ROADWAY WITHOUT PAVED SHOULDERS

ONE LANE TWO-WAY

CONTROL WITH FLAGGERS

LEGEND			
	Type 3 Barricade		Channelizing Devices
	Heavy Work Vehicle		Truck Mounted Attenuator (TMA)
	Trailer Mounted Flashing Arrow Board		Portable Changeable Message Sign (PCMS)
	Sign		Traffic Flow
	Flag		Flagger

Posted Speed ✳	Formula	Minimum Desirable Taper Lengths ✳✳			Suggested Maximum Spacing of Channelizing Devices		Minimum Sign Spacing "X" Distance	Suggested Longitudinal Buffer Space "B"	Stopping Sight Distance
		10' Offset	11' Offset	12' Offset	On a Taper	On a Tangent			
30	$L = \frac{WS^2}{60}$	150'	165'	180'	30'	60'	120'	90'	200'
35		205'	225'	245'	35'	70'	160'	120'	250'
40		265'	295'	320'	40'	80'	240'	155'	305'
45	L = WS	450'	495'	540'	45'	90'	320'	195'	360'
50		500'	550'	600'	50'	100'	400'	240'	425'
55		550'	605'	660'	55'	110'	500'	295'	495'
60		600'	660'	720'	60'	120'	600'	350'	570'
65		650'	715'	780'	65'	130'	700'	410'	645'
70		700'	770'	840'	70'	140'	800'	475'	730'
75		750'	825'	900'	75'	150'	900'	540'	820'

✳ Conventional Roads Only

✳✳ Taper lengths have been rounded off.

L=Length of Taper(FT) W=Width of Offset(FT) S=Posted Speed(MPH)

TYPICAL USAGE				
MOBILE	SHORT DURATION	SHORT TERM STATIONARY	INTERMEDIATE TERM STATIONARY	LONG TERM STATIONARY
	✓	✓	✓	

GENERAL NOTES

1. Flags attached to signs where shown, are REQUIRED.
2. All traffic control devices illustrated are REQUIRED, except those denoted with the triangle symbol may be omitted when stated elsewhere in the plans, or for routine maintenance maintenance work, when approved by the Engineer.
3. The CW3-4 "BE PREPARED TO STOP" sign may be installed after the CW20-4 "ONE LANE ROAD XXX FT" sign, but proper sign spacing shall be maintained.
4. Flaggers should use two-way radios or other methods of communication to control traffic.
5. Length of work space should be based on the ability of flaggers to communicate.
6. A Shadow Vehicle with a TMA should be used anytime it can be positioned 30 to 100 feet in advance of the area of crew exposure without adversely affecting the performance or quality of the work. If workers are no longer present but road or work conditions require the traffic control to remain in place, Type 3 Barricades or other channelizing devices may be substituted for the Shadow Vehicle and TMA.
7. Additional Shadow Vehicles with TMAs may be positioned off the paved surface, next to those shown in order to protect a wider work space.

TCP (2-2a)

8. The R1-2 "YIELD" sign traffic control may be used on projects with approaches that have adequate sight distance. For projects in urban areas, work space should be no longer than one half city block. In rural areas, roadways with less than 2000 ADT, work space should be no longer than 400 feet.
9. The R1-2aP "YIELD TO ONCOMING TRAFFIC" sign shall be placed on a support at a 7 foot minimum mounting height.

TCP (2-2b)

10. Channelizing devices on the center line may be omitted when a pilot car is leading traffic and approved by the Engineer.
11. If the work space is located near a horizontal or vertical curve, the buffer distances should be increased in order to maintain stopping sight distance to the flagger and a queue of stopped vehicles. (See table above).
12. Flaggers should use 24" STOP/SLOW paddles to control traffic. Flags should be limited to emergency situtations.

FREESE AND NICHOLS, INC.
TEXAS REGISTERED ENGINEERING FIRM F-2144

STATE OF TEXAS
COURTNEY L CUNNINGHAM
141398
LICENSED PROFESSIONAL ENGINEER
04-11-2023

FREESE AND NICHOLS
801 Cherry Street, Suite 2800
Fort Worth, TX 76102
Phone - (817) 735-7300
Web - www.freese.com

SABINE RIVER AUTHORITY TOLEDO BEND FISHING TOURNAMENT SITE

ROADWAY AND DRAINAGE ENGINEERING DESIGN

TRAFFIC CONTROL DETAILS 06

NO.	ISSUES	BY	DATE

F&N JOB NO.	OFF00000
DATE	00/00/00
DESIGNED	
DRAWN	
REVISED	
CHECKED	
FILE NAME	TCP06

VERIFY SCALE Bar is one inch on original drawing. If not one inch on this sheet, adjust scale.

SHEET

SEQ.

MicroStation V8 User: 03952 Office: pw:\\freese-pw.bentley.com:freese-pw-01\Documents\FNI - Texas\SRA22771 (Transportation)\2 Drawings\2.04 Infrastructure\2.04.02 Sheets\2.04.02.13 Standards\Traffic Standards\TCP06
Plotter: c:\pwworkingdir\freese-pw.bentley.com_freese-pw-01\dms31108\dms31108.pltg
Plot Scale: 2.1103 " / 1 ft. Model: Default
Date/Time: 21-2023 - 12:36:03 PM Project:Freese and Nichols, Inc.

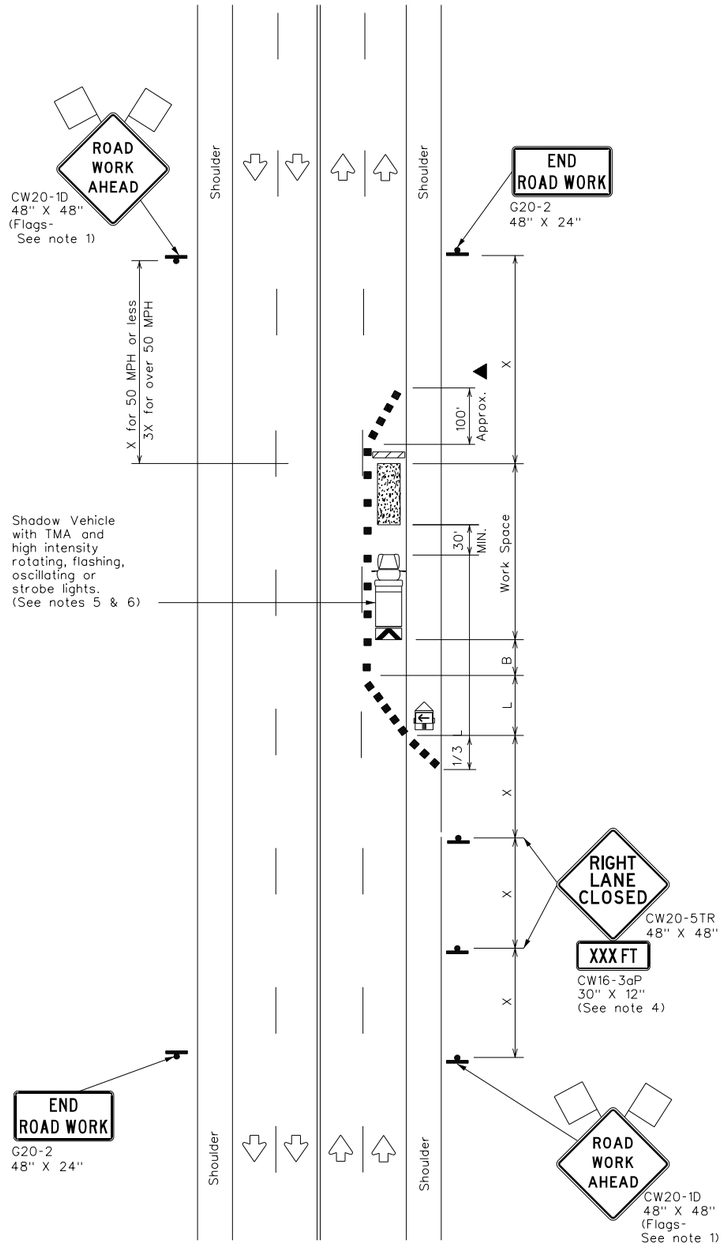

TCP (2-4a)

ONE LANE CLOSED

LEGEND			
	Type 3 Barricade		Channelizing Devices
	Heavy Work Vehicle		Truck Mounted Attenuator (TMA)
	Trailer Mounted Flashing Arrow Board		Portable Changeable Message Sign (PCMS)
	Sign		Traffic Flow
	Flag		Flagger

Posted Speed ✳	Formula	Minimum Desirable Taper Lengths ✳✳ 10' Offset	11' Offset	12' Offset	Suggested Maximum Spacing of Channelizing Devices On a Taper	On a Tangent	Minimum Sign Spacing "X" Distance	Suggested Longitudinal Buffer Space "B"
30	$L = \frac{WS^2}{60}$	150'	165'	180'	30'	60'	120'	90'
35		205'	225'	245'	35'	70'	160'	120'
40		265'	295'	320'	40'	80'	240'	155'
45	L = WS	450'	495'	540'	45'	90'	320'	195'
50		500'	550'	600'	50'	100'	400'	240'
55		550'	605'	660'	55'	110'	500'	295'
60		600'	660'	720'	60'	120'	600'	350'
65		650'	715'	780'	65'	130'	700'	410'
70		700'	770'	840'	70'	140'	800'	475'
75		750'	825'	900'	75'	150'	900'	540'

✳ Conventional Roads Only

✳✳ Taper lengths have been rounded off.
L = Length of Taper(FT) W = Width of Offset(FT) S = Posted Speed(MPH)

TYPICAL USAGE				
MOBILE	SHORT DURATION	SHORT TERM STATIONARY	INTERMEDIATE TERM STATIONARY	LONG TERM STATIONARY
		✓	✓	

GENERAL NOTES

1. Flags attached to signs where shown, are REQUIRED.
2. All traffic control devices illustrated are REQUIRED, except those denoted with the triangle symbol may be omitted when stated elsewhere in the plans, or for routine maintenance work, when approved by the Engineer.
3. The downstream taper is optional. When used, it should be 100 feet minimum length per lane.
4. For short term applications, when post mounted signs are not used, the distance legend may be shown on the sign face rather than on a CW16-3aP supplemental plaque.
5. A Shadow Vehicle with a TMA should be used anytime it can be positioned 30 to 100 feet in advance of the area of crew exposure without adversely affecting the performance or quality of the work. If workers are no longer present but road or work conditions require the traffic control to remain in place, Type 3 Barricades or other channelizing devices may be substituted for the Shadow Vehicle and TMA.
6. Additional Shadow Vehicles with TMAs may be positioned in each closed lane, on the shoulder or off the paved surface, next to those shown in order to protect a wider work space.

TCP (2-4a)

7. If this TCP is used for a left lane closure, CW20-5TL "LEFT LANE CLOSED" signs shall be used and channelizing devices shall be placed on the centerline to protect the work space from opposing traffic with the arrow board placed in the closed lane near the end of the merging taper.

FREESE AND NICHOLS, INC.
TEXAS REGISTERED ENGINEERING FIRM F-2144

STATE OF TEXAS
COURTNEY L CUNNINGHAM
141398
LICENSED PROFESSIONAL ENGINEER
04-11-2023

FREESE AND NICHOLS
801 Cherry Street, Suite 2800
Fort Worth, TX 76102
Phone - (817) 735-7300
Web - www.freese.com

SABINE RIVER AUTHORITY TOLEDO BEND FISHING TOURNAMENT SITE

ROADWAY AND DRAINAGE ENGINEERING DESIGN

TRAFFIC CONTROL DETAILS 07

NO.	ISSUES	BY	DATE

F&N JOB NO. OFF00000
DATE 00/00/00
DESIGNED
DRAWN
REVISED
CHECKED
FILE NAME TCP07

VERIFY SCALE Bar is one inch on original drawing. If not one inch on this sheet, adjust scale.

SHEET

SEQ.

MicroStation V8 User: 03952 Office:
pw:\\freese-pw.bentley.com:freese-pw-01\Documents\FNI - Texas\SRA22771 (Transportation)\2 Drawings\2.04 Infrastructure\2.04.02 Sheets\2.04.02.13 Standards\Traffic Standards\TCP07
Plotter: C:\pwworking\freese-pw.bentley.com_freese-pw-01\d0952\dms31108.pltcfg
Plot Scale: 2.1100 ' / in. Model: Default
Date/Time: 21-Mar-2023 - 12:36:59 PM Project: Freese and Nichols, Inc.

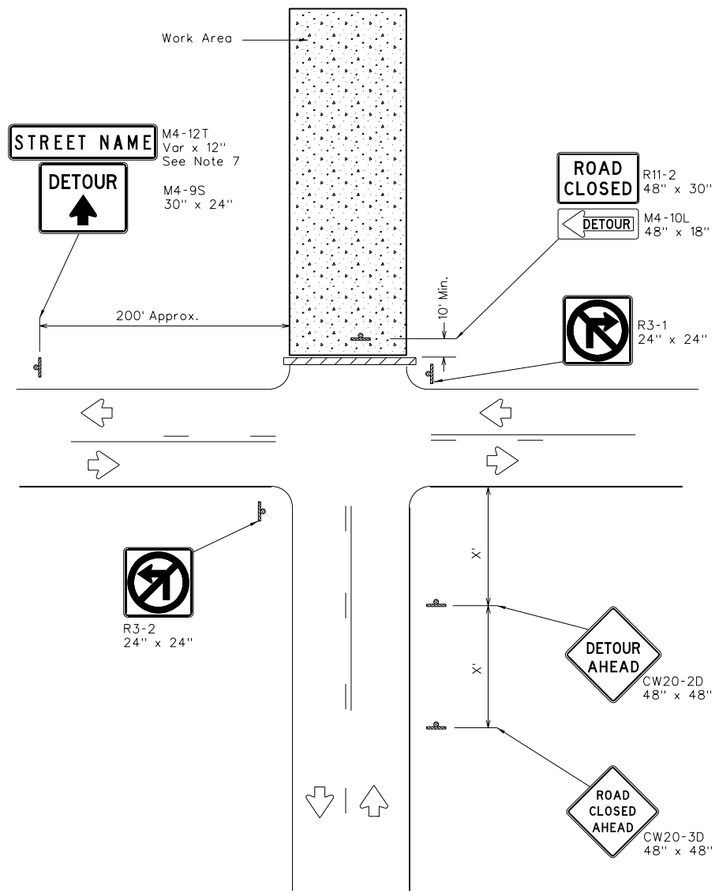

ROAD CLOSURE AT THE INTERSECTION

Signing for an Un-numbered Route with an Off-Site Detour

LEGEND	
	Type 3 Barricade
	Sign

Posted Speed ✳	Minimum Sign Spacing "X" Distance
30	120'
35	160'
40	240'
45	320'
50	400'
55	500'
60	600'
65	700'
70	800'
75	900'

✳ Conventional Roads Only

GENERAL NOTES

1. This sheet is intended to provide details for temporary work zone road closures. For permanent road closure details see the D&OM standards.

2. Barricades used shall meet the requirements shown on Barricade and Construction Standard BC(10) and listed on the Compliant Work Zone Traffic Control Devices list (CWZTCD).

3. Stockpiled materials shall not be placed on the traffic side of barricades.

4. Barricades at the road closure should extend from pavement edge to pavement edge.

5. Detour signing shown is intended to illustrate the type of signing that is appropriate for numbered routes or un-numbered routes as labeled. It does not indicate the full extent of detour signing required. Detour routes should be signed as shown elsewhere in the plans.

6. If the road is open for a significant distance beyond the intersection or there are significant origin/destination points beyond the intersection, the signs and barricades at this location should be located at the edge of the traveled way.

7. The Street Name (M4-12T) sign is to be placed above the DETOUR (M4-9S) sign.

8. For urban areas where there is a shorter distance between the intersection and the actual closure location, the ROAD CLOSED XX MILES AHEAD (R11-3a) sign may be replaced with a ROAD CLOSED TO THRU TRAFFIC (R11-4) sign. If adequate space does not exist between the intersection and the closure a single ROAD CLOSED AHEAD (CW20-3D) sign spaced as per the table above may replace the ROAD CLOSED 1000 FT (CW20-3B) and ROAD CLOSED 500 FT (CW20-3C) signs.

9. Signs and barricades shown shall be subsidiary to Item 502. Locations where these details will be required shall be as shown elsewhere in the plans.

FREESE AND NICHOLS, INC.
TEXAS REGISTERED ENGINEERING FIRM F-2144

STATE OF TEXAS
COURTNEY I CUNNINGHAM
141398
LICENSED PROFESSIONAL ENGINEER
04-11-2023

FREESE AND NICHOLS
801 Cherry Street, Suite 2800
Fort Worth, TX 76102
Phone - (817) 735-7300
Web - www.freese.com

SABINE RIVER AUTHORITY TOLEDO BEND FISHING TOURNAMENT SITE

ROADWAY AND DRAINAGE ENGINEERING DESIGN

TRAFFIC CONTROL DETAILS 08

NO.	ISSUES	BY	DATE

F&N JOB NO.	OFF0000
DATE	00/00/00
DESIGNED	
DRAWN	
REVISED	
CHECKED	
FILE NAME	TCP08

VERIFY SCALE Bar is one inch on original drawing. If not one inch on this sheet, adjust scale.
0 1

SHEET

SEQ.

MicroStation V8 User: 03952 Office:
pw:\\freese-pw.bentley.com:freese-pw-01\Documents\FNI - Texas\SRA22771 (Transportation)\2 Drawings\2.04 Infrastructure\2.04.02 Sheets\2.04.02.13 Standards\Traffic Standards\TCP08
Plotter: c:\pwworking\pw-freese-pw-01\dms22771\tcp08_01.pltcfg Model: Default
Plot Scale: 2.1729 "/" ft. Project:Freese and Nichols, Inc.
Date: Mar. 21, 2023 - 12:37:48 PM

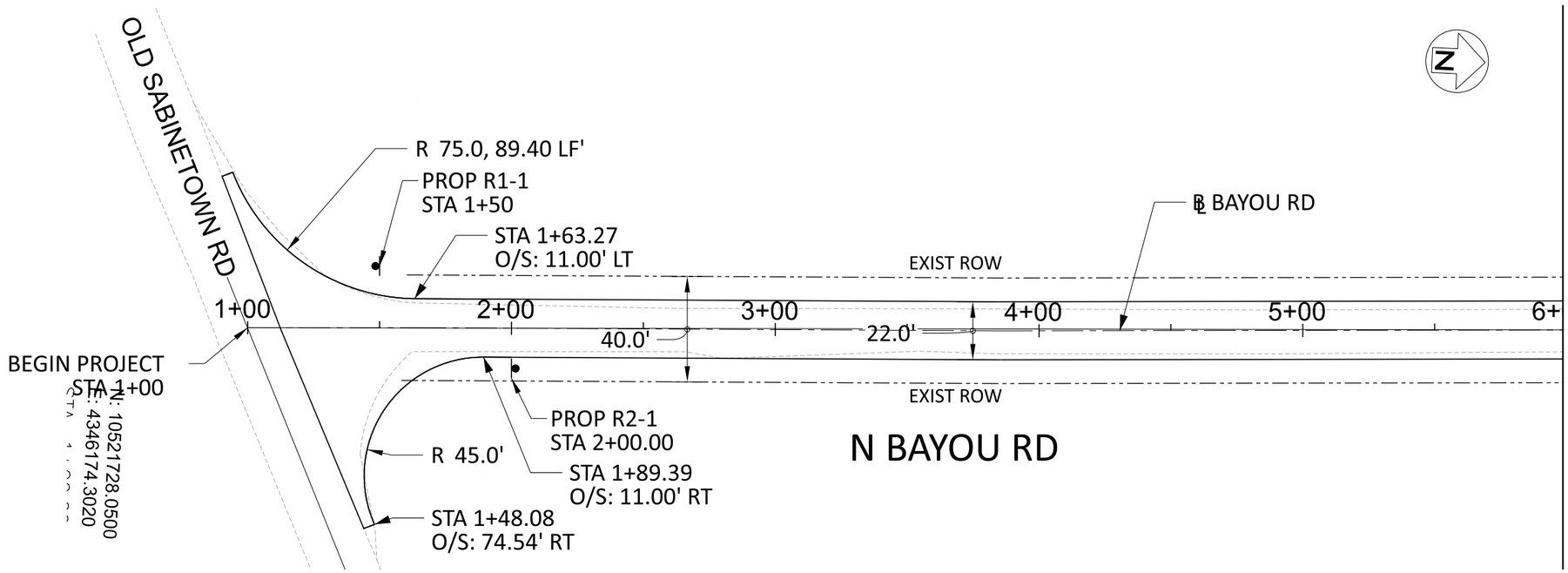

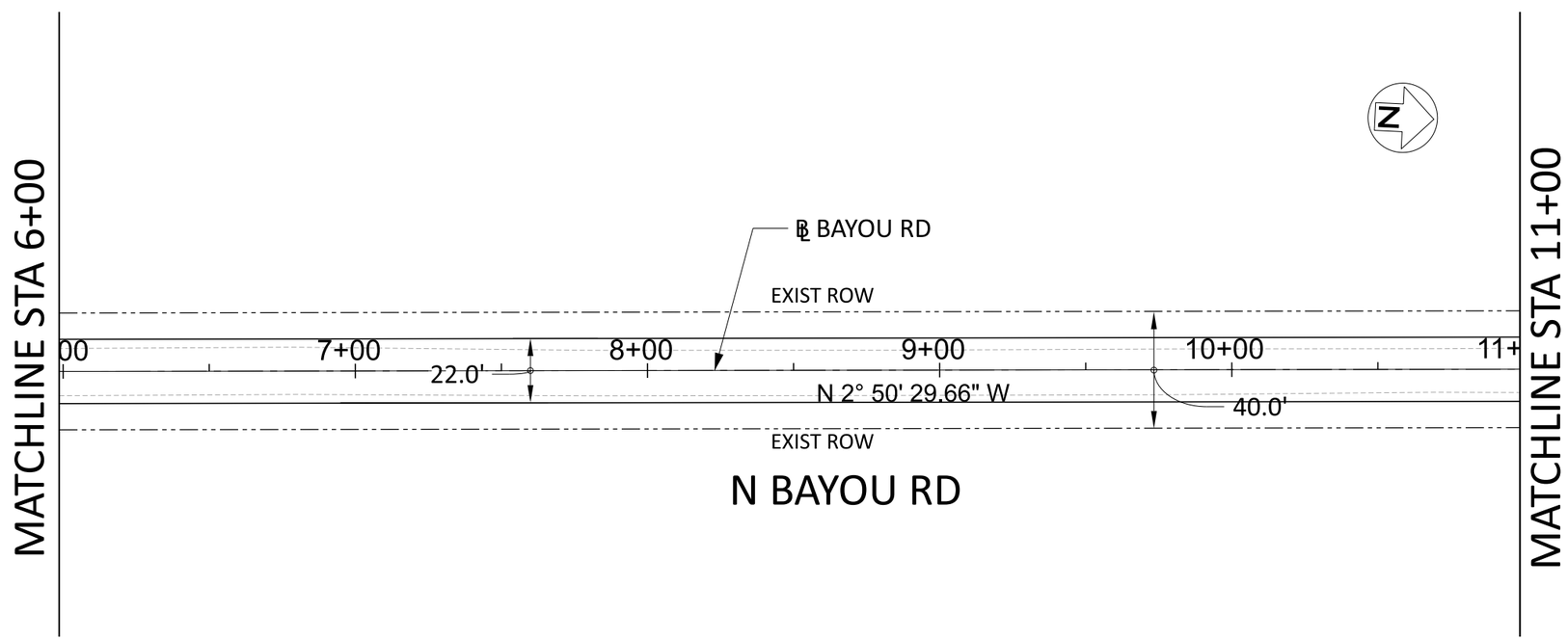

NOTE: GEOMETRIC AND CURVE DATA WILL BE SHOWN ON CONTROL SHEET AND PROJECT LAYOUT SHEETS.

LEGEND

EXIST. ROW

FLEXIBLE DELINEATOR

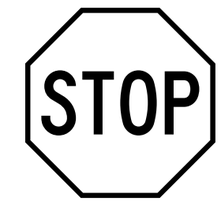

R1-1

R2-1

FREESE AND NICHOLS, INC.
TEXAS REGISTERED ENGINEERING FIRM F-2144

STATE OF TEXAS
COURTNEY I CUNNINGHAM
141398
LICENSED
PROFESSIONAL ENGINEER
04-11-2023

FREESE AND NICHOLS
801 Cherry Street, Suite 2800
Fort Worth, TX 76102
Phone - (817) 735-7300
Web - www.freese.com

SABINE RIVER AUTHORITY TOLEDO BEND FISHING TOURNAMENT SITE
ROADWAY AND DRAINAGE ENGINEERING DESIGN

CIVIL
ROADWAY & DRAINAGE PLAN SHEETS
STA 0+00 TO STA 11+00

NO.	ISSUES	BY	DATE

F&N JOB NO. OFF00000
DATE 00/00/00
DESIGNED CC
DRAWN CC
REVISED XXX
CHECKED XXX
FILE NAME RWDYP_01.dgn

VERIFY SCALE
0 1
Bar is one inch on original drawing.
If not one inch on this sheet, adjust scale.

SHEET 1
SEQ.

ISSUE FOR BID

MicroStation V8 User: freesepw11lcs02\ICS_pdf_work_dir\3813\28159_1\RWDYP_01.dgn
Plotter: C:\Program Files (x86)\Common Files\InterPlot\Plot\bin\pltdrvn.plt
Plot Scale: 50.000 ' / in.
Date: Apr. 03, 2023 - 11:00:22 PM
Model: Default
Project: Freese and Nichols, Inc.

Office: Date: Apr. 03, 2023 - 11:00:22 PM User: freesepw11lcs02\ICS_pdf_work_dir\3813\28159_1\RWDYP_01.dgn

LEGEND

EXIST. ROW

FLEXIBLE DELINEATOR

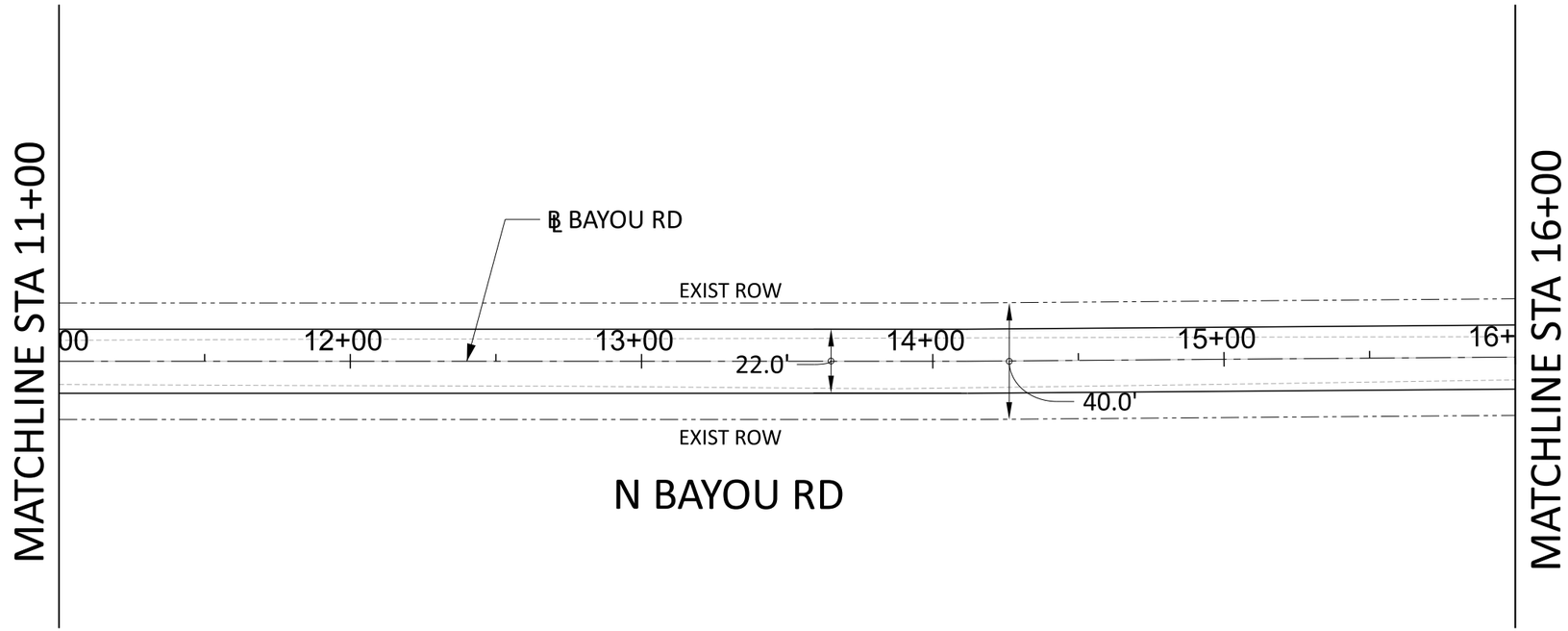

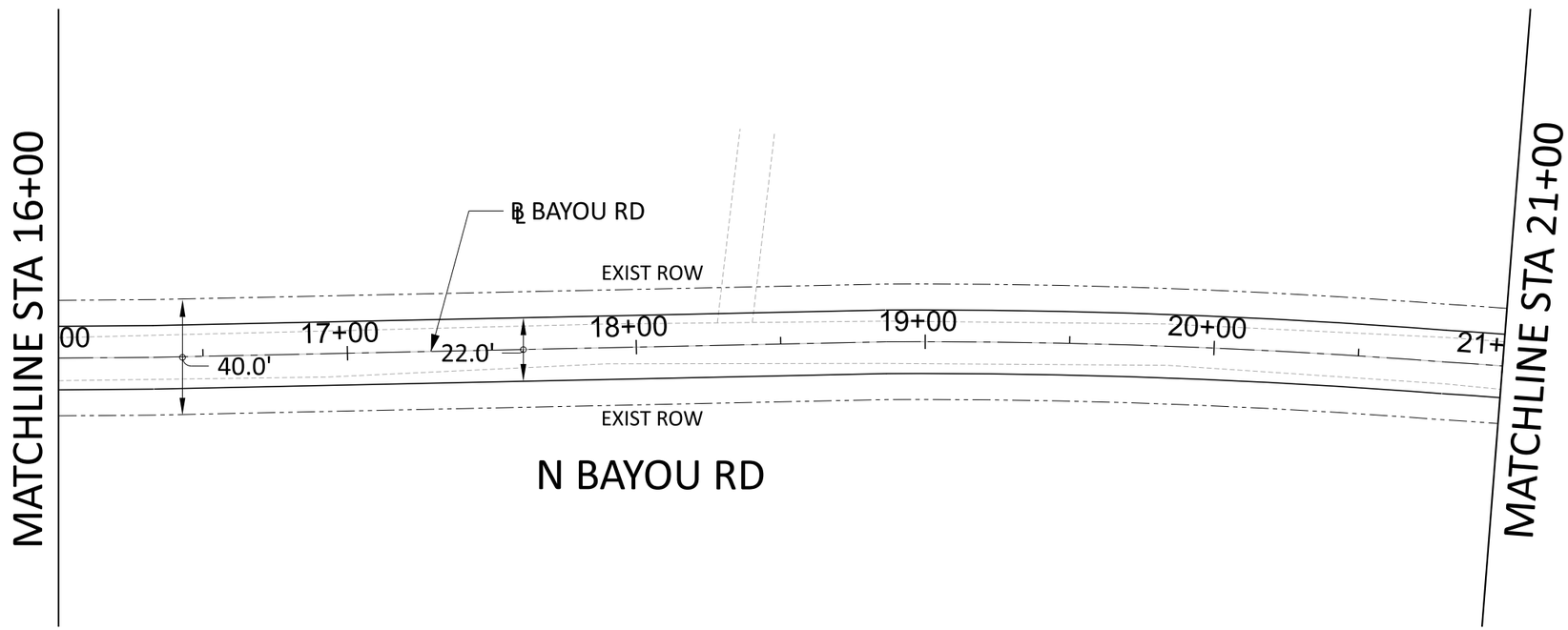

NOTE: GEOMETRIC AND CURVE DATA WILL BE SHOWN ON CONTROL SHEET AND PROJECT LAYOUT SHEETS.

ISSUE FOR BID

FREESE AND NICHOLS, INC.
TEXAS REGISTERED ENGINEERING FIRM F-2144

STATE OF TEXAS
COURTNEY I CUNNINGHAM
141398
LICENSED PROFESSIONAL ENGINEER
04-11-2023

FREESE AND NICHOLS
801 Cherry Street, Suite 2800
Fort Worth, TX 76102
Phone - (817) 735-7300
Web - www.freese.com

SABINE RIVER AUTHORITY TOLEDO BEND FISHING TOURNAMENT SITE

ROADWAY AND DRAINAGE ENGINEERING DESIGN

CIVIL

ROADWAY & DRAINAGE PLAN SHEETS
STA 11+00 TO STA 21+00

F&N JOB NO.	OFF00000
DATE	00/00/00
DESIGNED	XXX
DRAWN	XXX
REVISED	XXX
CHECKED	XXX
FILE NAME	RWDYP_02.dgn

NO.	ISSUES	BY	DATE

VERIFY SCALE Bar is one inch on original drawing. If not one inch on this sheet, adjust scale.
0 1

SHEET 1

SEQ.

LEGEND

EXIST. ROW

FLEXIBLE DELINEATOR

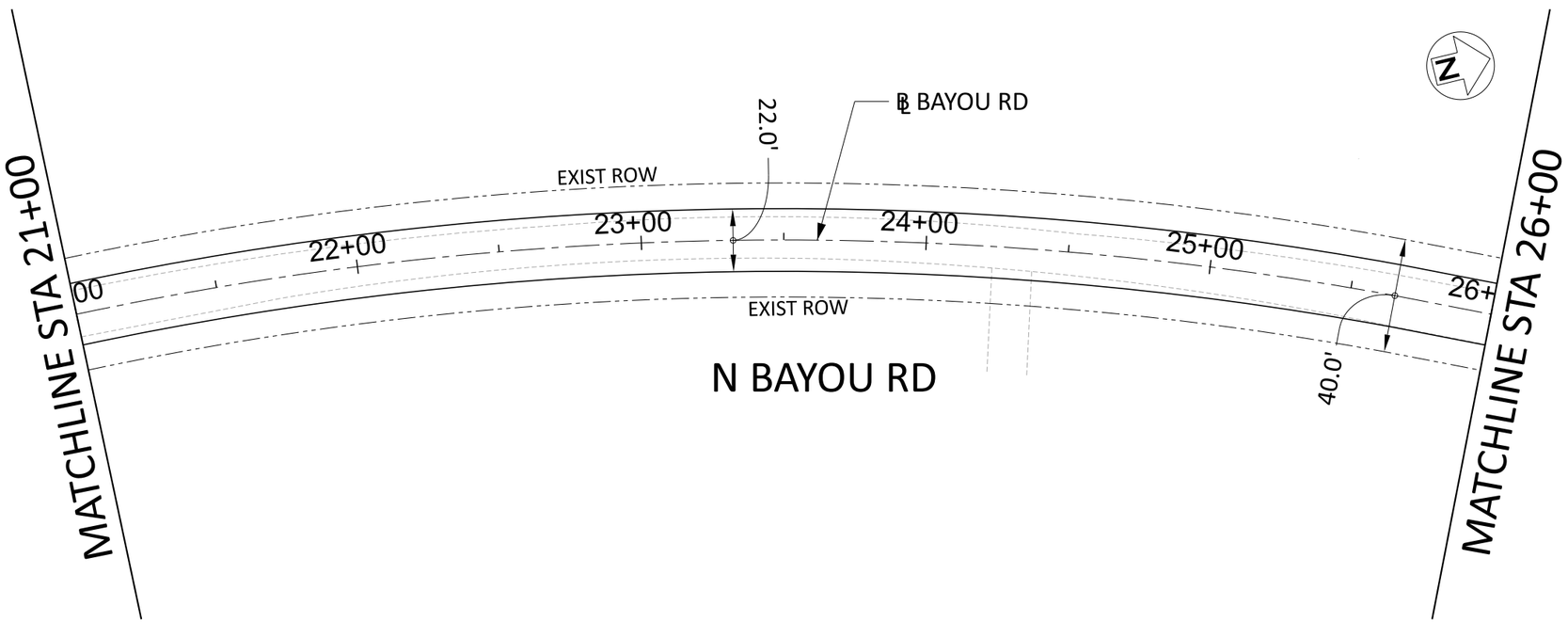

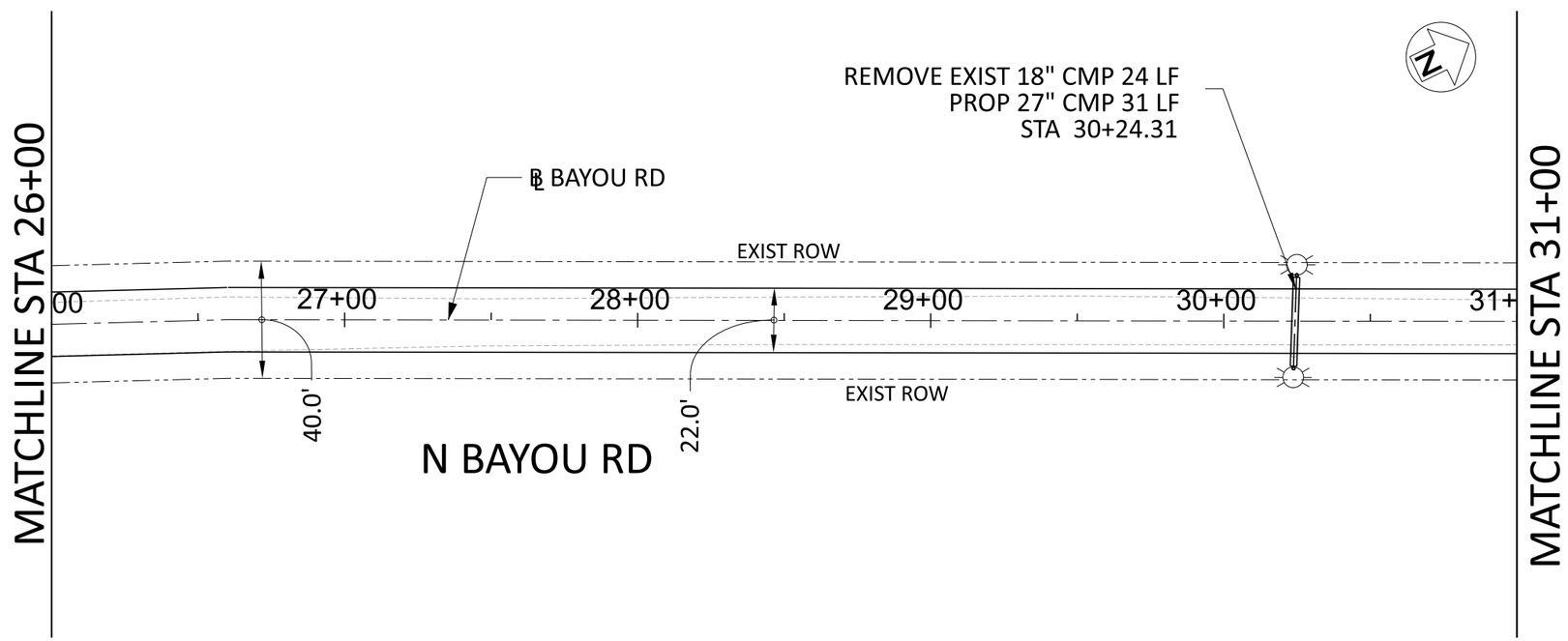

NOTE: GEOMETRIC AND CURVE DATA WILL BE SHOWN ON CONTROL SHEET AND PROJECT LAYOUT SHEETS.

ISSUE FOR BID

FREESE AND NICHOLS, INC.
TEXAS REGISTERED ENGINEERING FIRM F-2144

STATE OF TEXAS
COURTNEY I CUNNINGHAM
141398
LICENSED
PROFESSIONAL ENGINEER
04-11-2023

FREESE AND NICHOLS
801 Cherry Street, Suite 2800
Fort Worth, TX 76102
Phone - (817) 735-7300
Web - www.freese.com

SABINE RIVER AUTHORITY TOLEDO BEND FISHING TOURNAMENT SITE

ROADWAY AND DRAINAGE ENGINEERING DESIGN

CIVIL

ROADWAY & DRAINAGE PLAN SHEETS
STA 21+00 TO STA 31+00

F&N JOB NO. OFF00000
DATE 00/00/00
DESIGNED XXX
DRAWN XXX
REVISED XXX
CHECKED XXX
FILE NAME RWDYP_03.dgn

NO. | ISSUES | BY | DATE

VERIFY SCALE 0 1
Bar is one inch on original drawing.
If not one inch on this sheet, adjust scale.

SHEET 1
SEQ.

MicroStation V8 User: freesepw11cs02
Office: /freesepw11cs02/ICS_pdf_work_dir/3813/28159_3/RWDYP_03.dgn
Plotter: C:\Program Files\PDFCreator\ Bentley\PrintPDF\PDFCreator.pdf
Plot Scale: 50.000 / 1 in.
Date: Apr. 03, 2023 - 11:01:04 PM
Model: Default
Project: Freese and Nichols Inc.

Office: Date: Apr. 03, 2023 - 11:01:04 PM User: freesepw11cs02 File: /freesepw11cs02/ICS_pdf_work_dir\3813\28159_3\RWDYP_03.dgn

LEGEND

EXIST. ROW

FLEXIBLE DELINEATOR

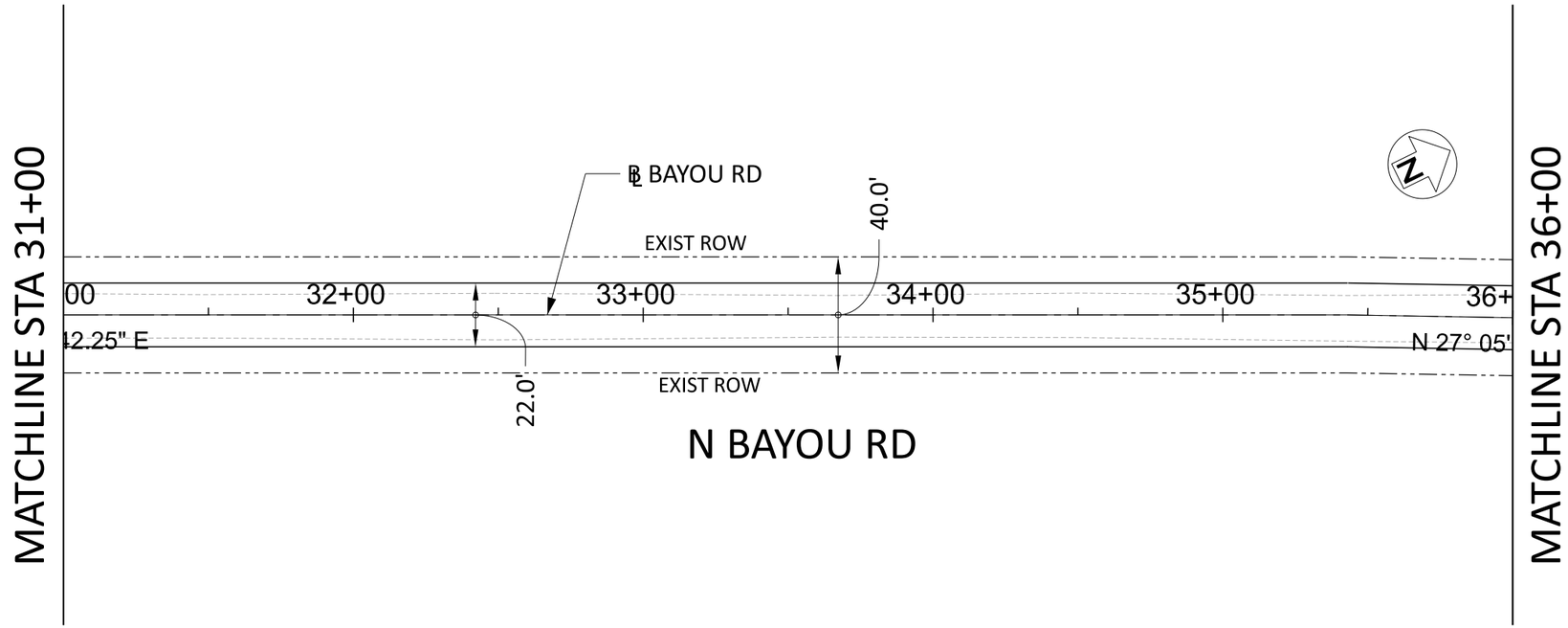

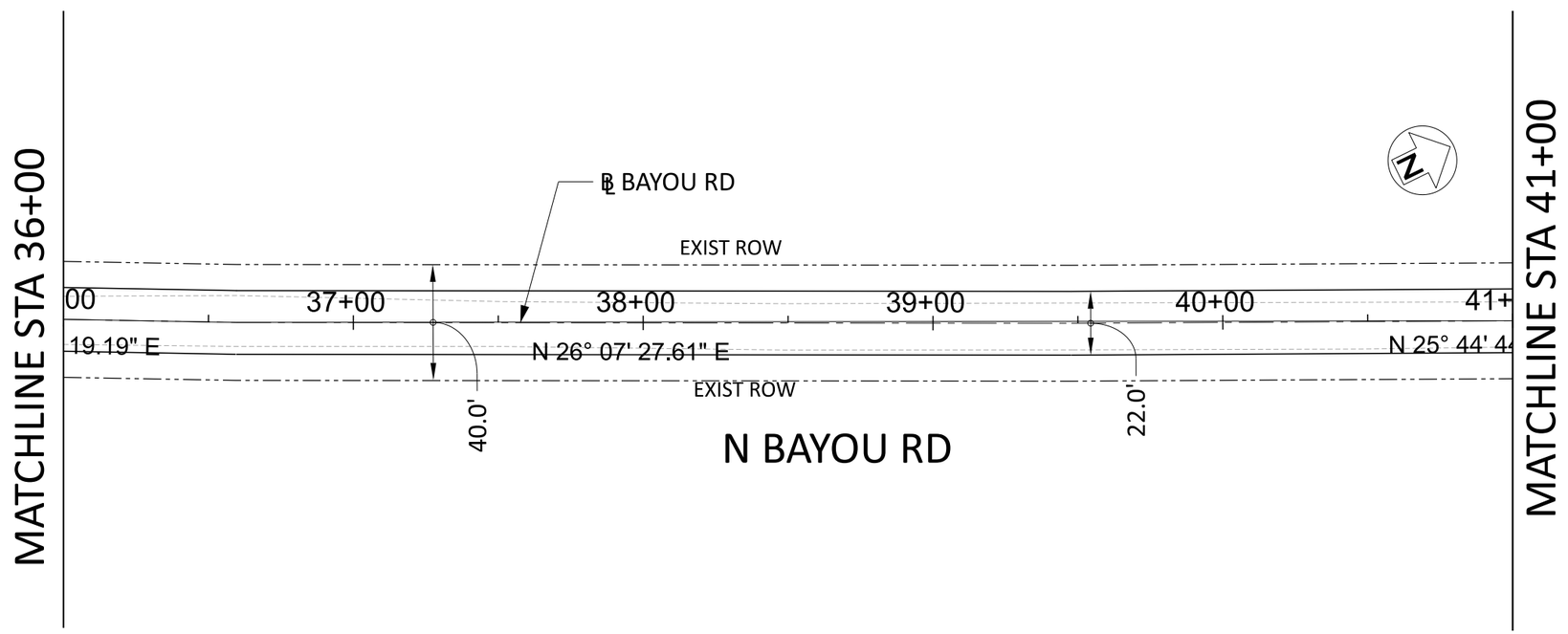

NOTE: GEOMETRIC AND CURVE DATA WILL BE SHOWN ON CONTROL SHEET AND PROJECT LAYOUT SHEETS.

ISSUE FOR BID

FREESE AND NICHOLS, INC.
TEXAS REGISTERED ENGINEERING FIRM F-2144

STATE OF TEXAS
COURTNEY I CUNNINGHAM
141398
LICENSED PROFESSIONAL ENGINEER
04-11-2023

FREESE AND NICHOLS
801 Cherry Street, Suite 2800
Fort Worth, TX 76102
Phone - (817) 735-7300
Web - www.freese.com

SABINE RIVER AUTHORITY TOLEDO BEND FISHING TOURNAMENT SITE

ROADWAY AND DRAINAGE ENGINEERING DESIGN

CIVIL

ROADWAY & DRAINAGE PLAN SHEETS
STA 31+00 TO STA 41+00

F&N JOB NO. OFF00000
DATE 00/00/00
DESIGNED XXX
DRAWN XXX
REVISED XXX
CHECKED XXX
FILE NAME RWDYP_04.dgn

NO.	ISSUES	BY	DATE

VERIFY SCALE
0 1"
Bar is one inch on original drawing.
If not one inch on this sheet, adjust scale.

SHEET 1

SEQ.

MicroStation V8 User: freesepw11
Office: freesepw11\ics02\ICS_pdf_work_dir\3813\28159_4\RWDYP_04.dgn
Plotter: C:\Program Files\PDF Complete\pdfcmd.exe -p "HP Officejet Pro L7500 series"
Plot Scale: 50.000 / 1 in. Model: Default
Date: Apr. 03, 2023 - 11:00:42 PM Project: Freese and Nichols Inc.

Office: Date: Apr. 03, 2023 - 11:00:42 PM User: freesepw11 File: C:\ics02\ICS_pdf_work_dir\3813\28159_4\RWDYP_04.dgn

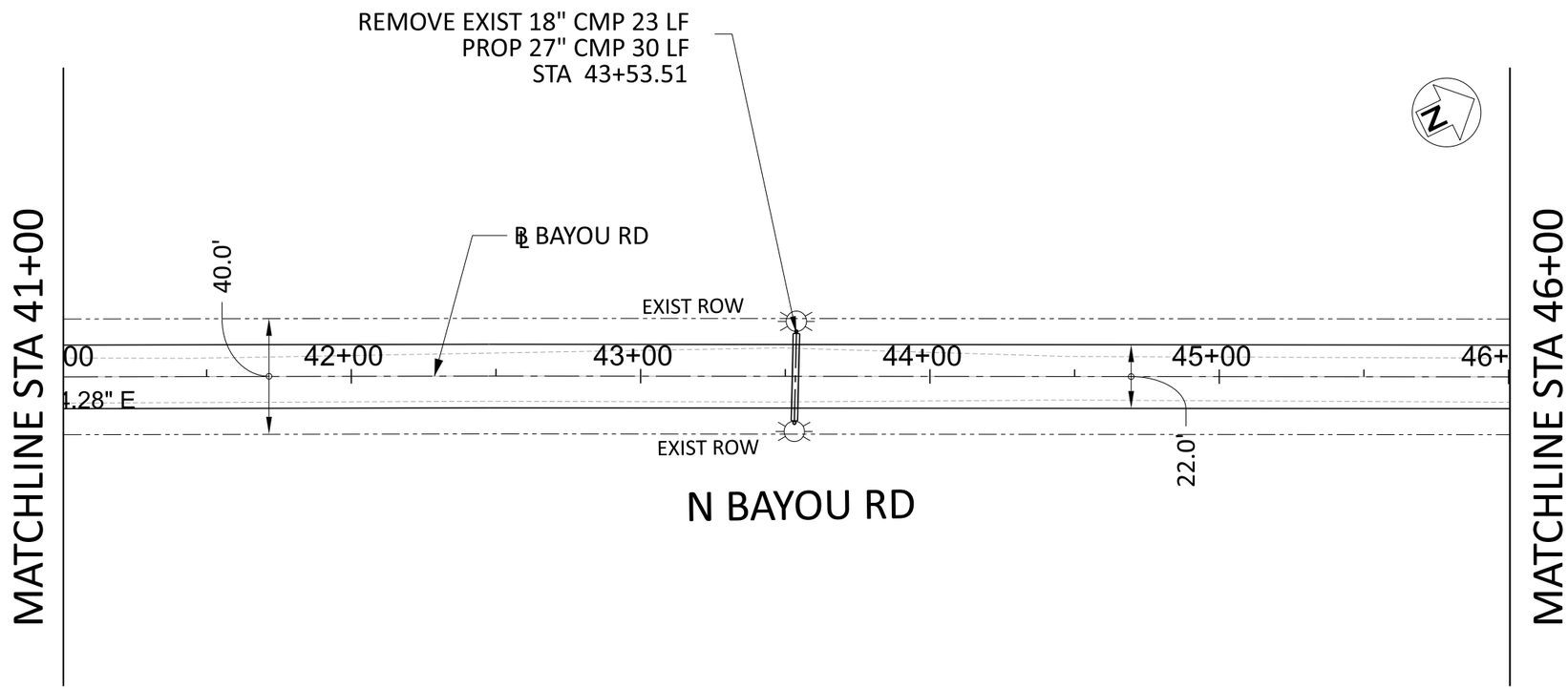

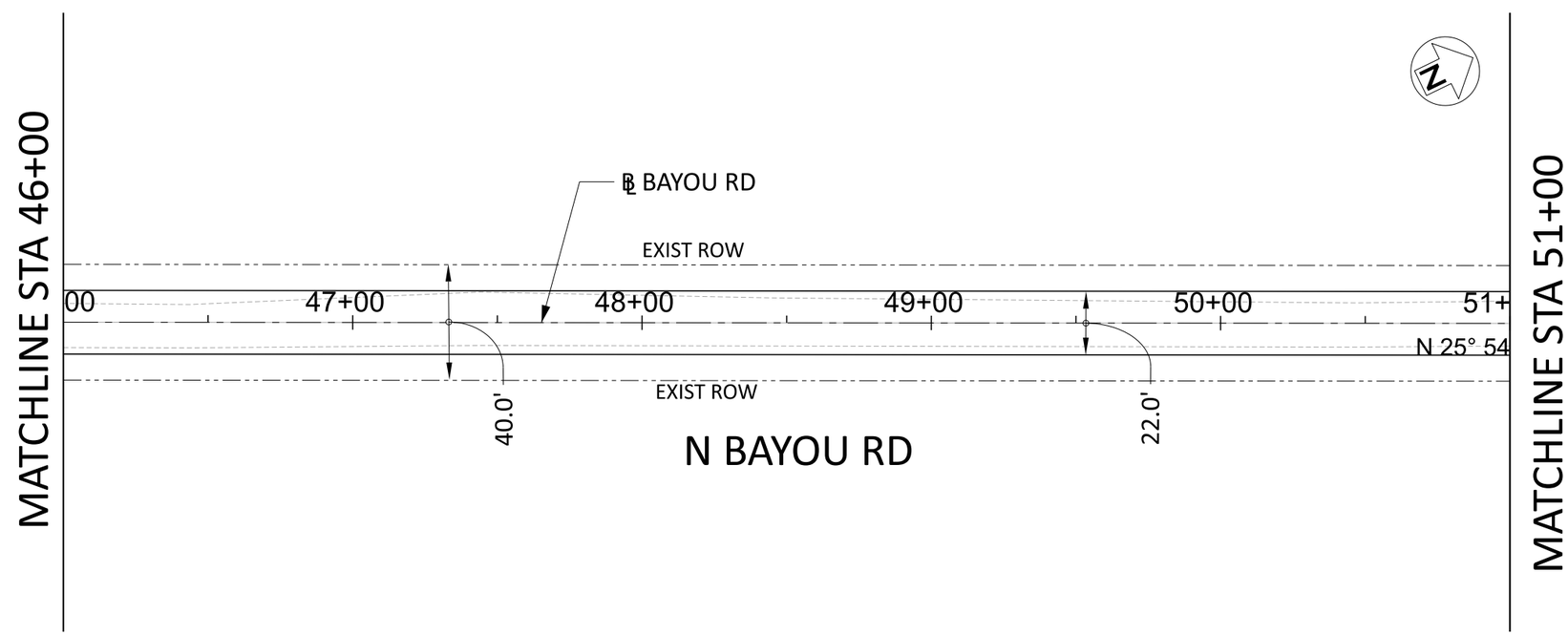

NOTE: GEOMETRIC AND CURVE DATA WILL BE SHOWN ON CONTROL SHEET AND PROJECT LAYOUT SHEETS.

LEGEND

EXIST. ROW

FLEXIBLE DELINEATOR

ISSUE FOR BID

FREESE AND NICHOLS, INC.
TEXAS REGISTERED ENGINEERING FIRM F-2144

STATE OF TEXAS
COURTNEY I CUNNINGHAM
141398
LICENSED PROFESSIONAL ENGINEER
04-11-2023

FREESE AND NICHOLS
801 Cherry Street, Suite 2800
Fort Worth, TX 76102
Phone - (817) 735-7300
Web - www.freese.com

SABINE RIVER AUTHORITY TOLEDO BEND FISHING TOURNAMENT SITE

ROADWAY AND DRAINAGE ENGINEERING DESIGN

CIVIL

ROADWAY & DRAINAGE PLAN SHEETS
STA 41+00 TO STA 51+00

NO.	ISSUES	BY	DATE

F&N JOB NO. OFF00000
DATE 00/00/00
DESIGNED XXX
DRAWN XXX
REVISED XXX
CHECKED XXX
FILE NAME RWDYP_05.dgn

VERIFY SCALE Bar is one inch on original drawing. If not one inch on this sheet, adjust scale.
0 1

SHEET 1
SEQ.

MicroStation V8 User: freesepw11
Office: freesepw11\ics02\ICS_pdf_work_dir\3813\28159_5\RWDYP_05.dgn
Plotter: C:\Program Files\PDF Complete\Bentley PDF Printer.pdf
Plot Scale: 50.000 / 1 in.
Date: Apr 03, 2023 - 11:00:39 PM
Model: Default
Project: Freese and Nichols Inc.

Office: Date: Apr. 03, 2023 - 11:00:39 PM User: freesepw11 File: freesepw11\ics02\ICS_pdf_work_dir\3813\28159_5\RWDYP_05.dgn

LEGEND

EXIST. ROW

FLEXIBLE DELINEATOR

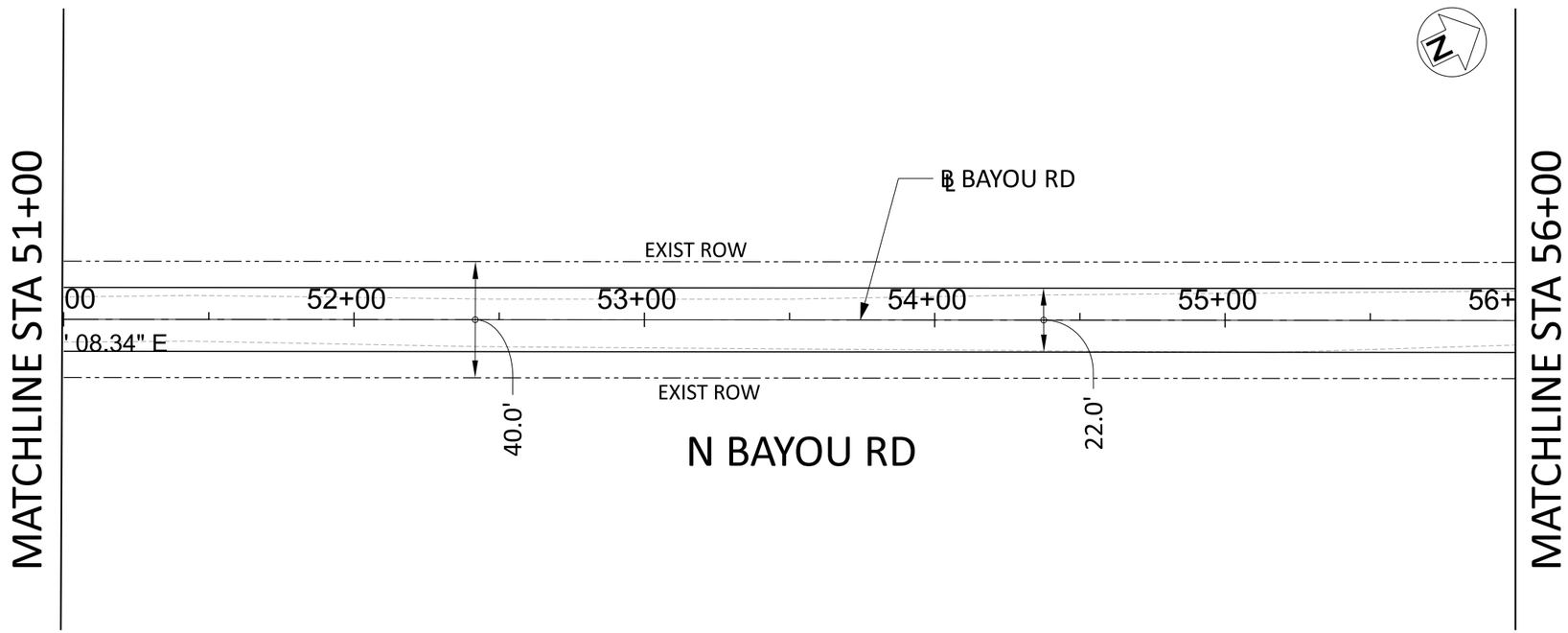

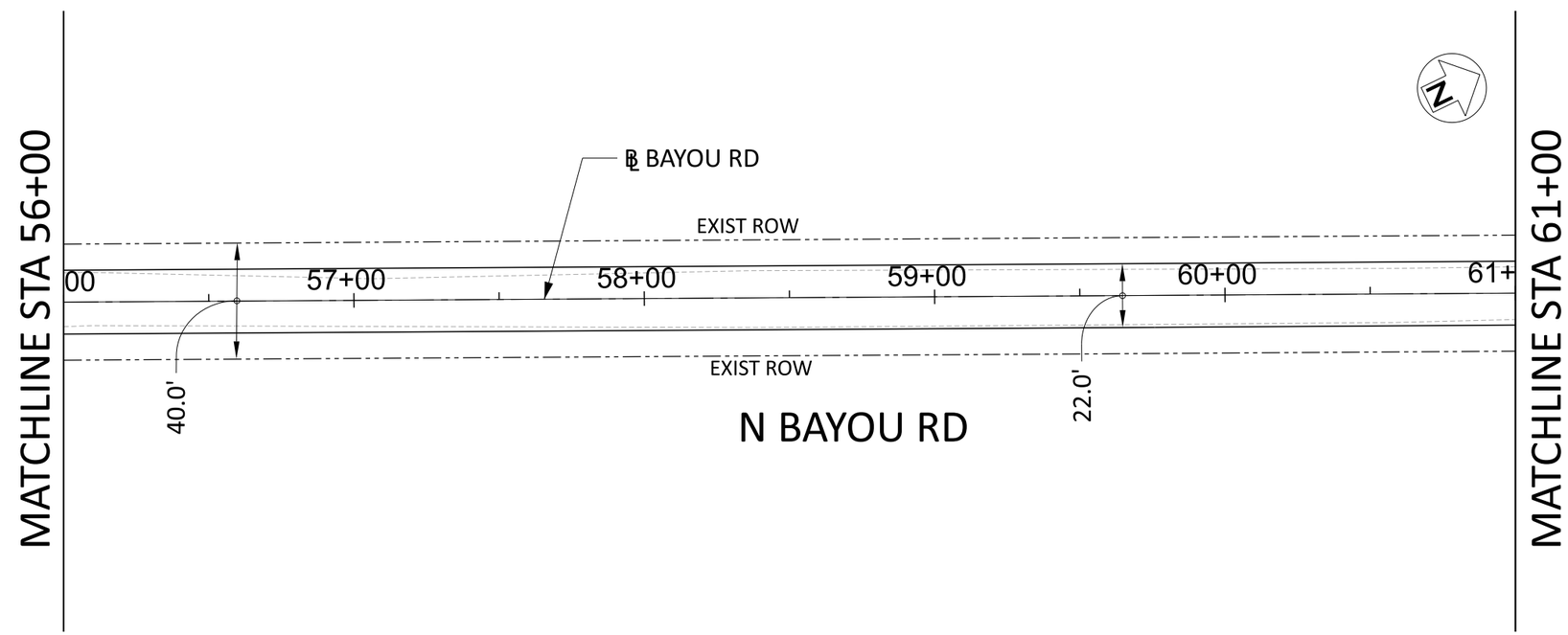

NOTE: GEOMETRIC AND CURVE DATA WILL BE SHOWN ON CONTROL SHEET AND PROJECT LAYOUT SHEETS.

ISSUE FOR BID

FREESE AND NICHOLS, INC.
TEXAS REGISTERED ENGINEERING FIRM F-2144

STATE OF TEXAS
COURTNEY I CUNNINGHAM
141398
LICENSED PROFESSIONAL ENGINEER
04-11-2023

FREESE AND NICHOLS
801 Cherry Street, Suite 2800
Fort Worth, TX 76102
Phone - (817) 735-7300
Web - www.freese.com

SABINE RIVER AUTHORITY TOLEDO BEND FISHING TOURNAMENT SITE

ROADWAY AND DRAINAGE ENGINEERING DESIGN

CIVIL

ROADWAY & DRAINAGE PLAN SHEETS
STA 51+00 TO STA 61+00

NO.	ISSUES	BY	DATE

F&N JOB NO. OFF00000

DATE	00/00/00
DESIGNED	XXX
DRAWN	XXX
REVISED	XXX
CHECKED	XXX
FILE NAME	RWDYP_06.dgn

VERIFY SCALE 0 1
Bar is one inch on original drawing.
If not one inch on this sheet, adjust scale.

SHEET 1

SEQ.

MicroStation V8 User: freesepw11
Office: freesepw11\ics02\ICS_pdf_work_dir\3813\28159_6\RWDYP_06.dgn
Plotter: C:\Program Files\PDFCreator\PDFCreator.pdf Driver: pdf
Plot Scale: 50.000 / 1 in. Model: Default
Date: Apr. 03, 2023 - 11:00:39 PM Project: Freese and Nichols Inc.

Office: Date: Apr. 03, 2023 - 11:00:39 PM User: freesepw11 File: C:\pw_temp\freesepw11\ics02\ICS_pdf_work_dir\3813\28159_6\RWDYP_06.dgn

LEGEND

EXIST. ROW

FLEXIBLE DELINEATOR

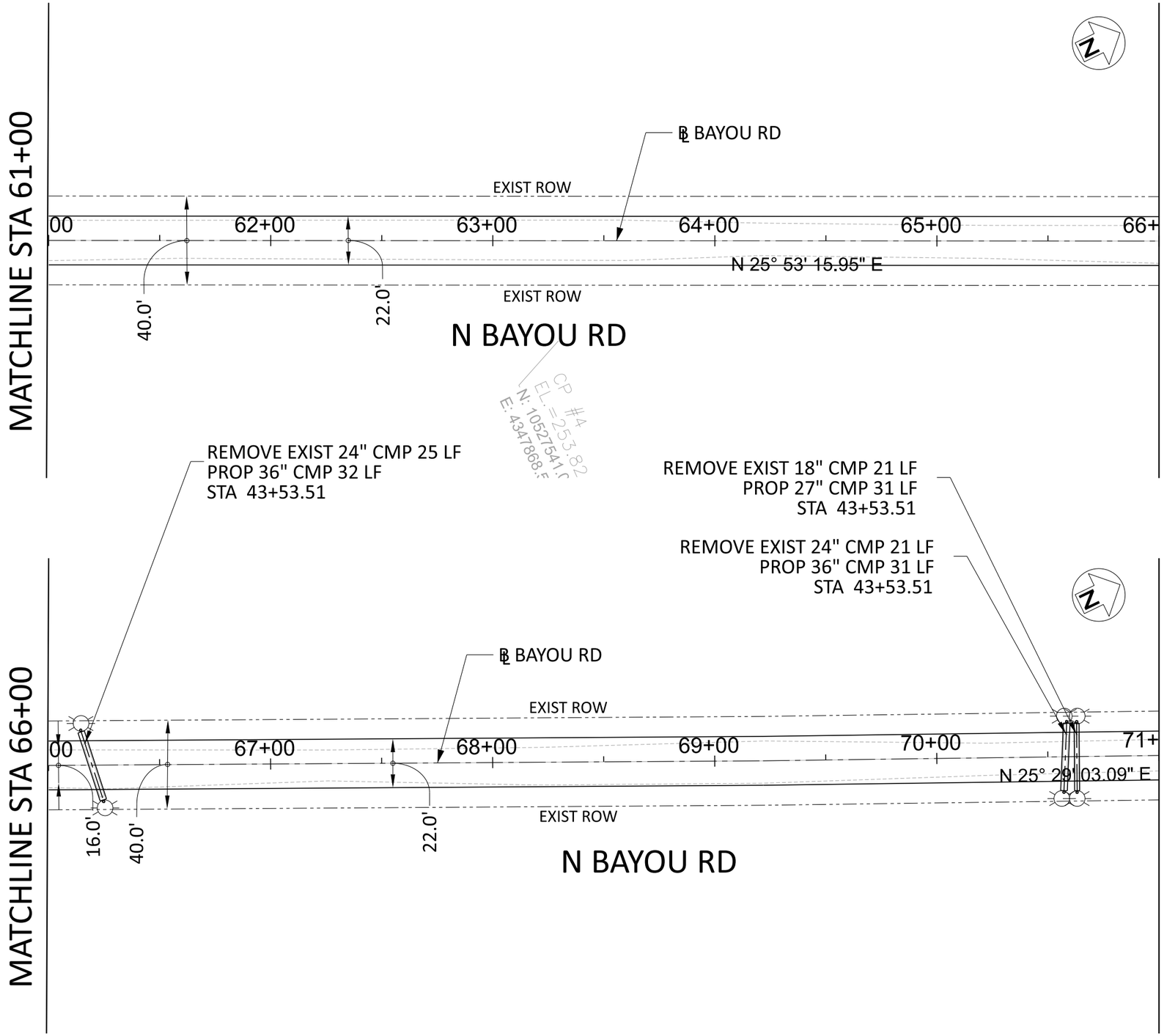

NOTE: GEOMETRIC AND CURVE DATA WILL BE SHOWN ON CONTROL SHEET AND PROJECT LAYOUT SHEETS.

ISSUE FOR BID

FREESE AND NICHOLS, INC.
TEXAS REGISTERED ENGINEERING FIRM F-2144

STATE OF TEXAS
COURTNEY I CUNNINGHAM
141398
LICENSED PROFESSIONAL ENGINEER
04-11-2023

FREESE AND NICHOLS
801 Cherry Street, Suite 2800
Fort Worth, TX 76102
Phone - (817) 735-7300
Web - www.freese.com

SABINE RIVER AUTHORITY TOLEDO BEND FISHING TOURNAMENT SITE

ROADWAY AND DRAINAGE ENGINEERING DESIGN

CIVIL

ROADWAY & DRAINAGE PLAN SHEETS
STA 61+00 TO STA 71+00

NO.	ISSUES	BY	DATE

F&N JOB NO. OFF00000
DATE 00/00/00
DESIGNED XXX
DRAWN XXX
REVISED XXX
CHECKED XXX
FILE NAME RWDYP_07.dgn

VERIFY SCALE Bar is one inch on original drawing. If not one inch on this sheet, adjust scale.
0 1

SHEET 1

SEQ.

MicroStation V8 User: freesepw11
Office: I:\freesepw11\ics02\ICS_pdf_work_dir\3813\28159_7\RWDYP_07.dgn
Plotter: C:\Program Files\Bentley\Common\Plotters\PDF Printer.pltr
Pen Table: C:\Program Files\Bentley\Common\Plotters\Default.tbl
Plot Scale: 50.000 / 1in. Model: Default
Date: Apr. 03, 2023 - 11:01:31 PM Project: Freese and Nichols, Inc.

Office: Date: Apr. 03, 2023 - 11:01:31 PM User: freesepw11 File: I:\freesepw11\ics02\ICS_pdf_work_dir\3813\28159_7\RWDYP_07.dgn

LEGEND

EXIST. ROW

FLEXIBLE DELINEATOR

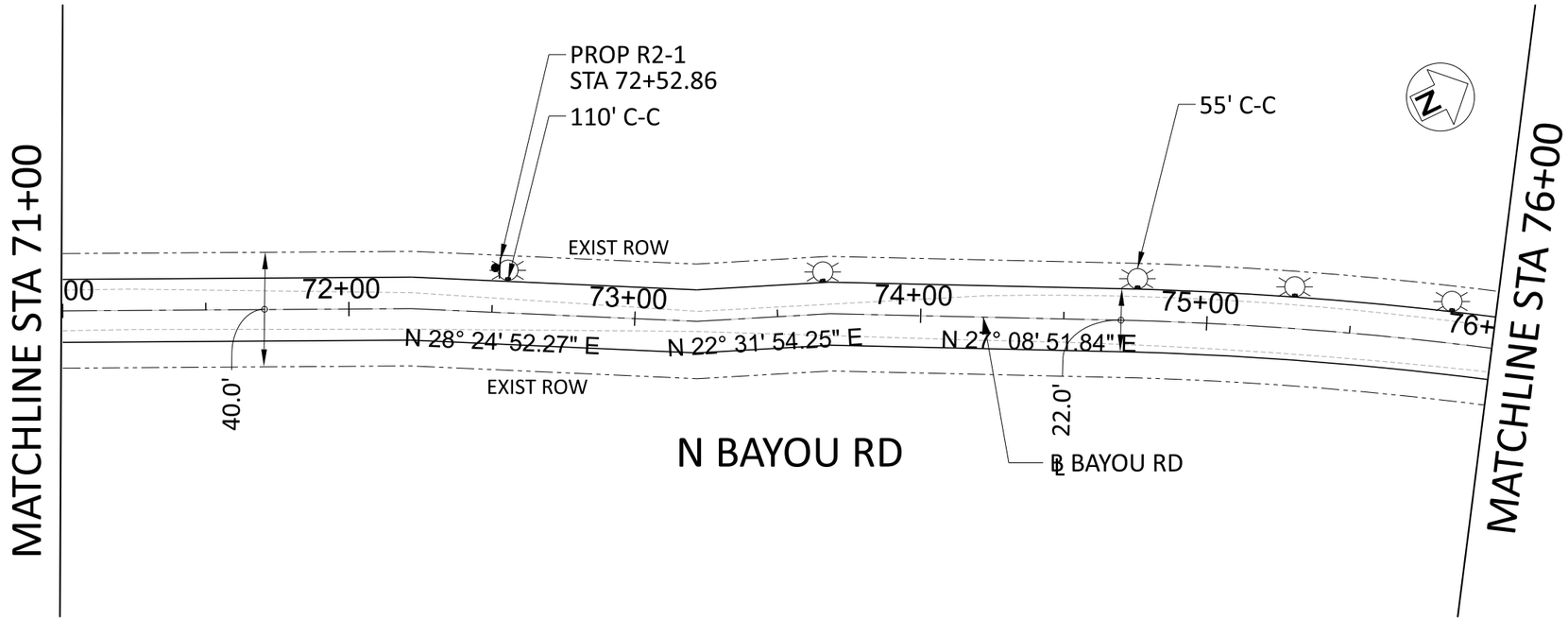

R2-1

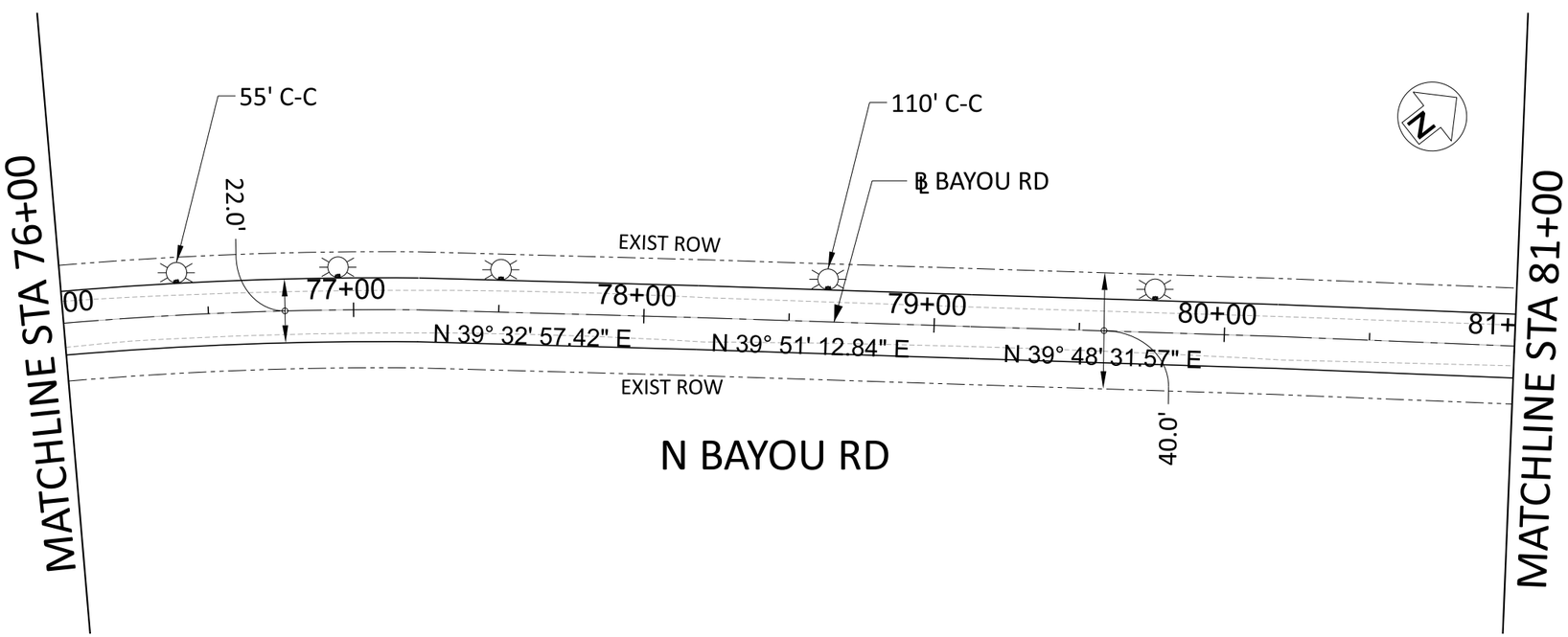

NOTE: GEOMETRIC AND CURVE DATA WILL BE SHOWN ON CONTROL SHEET AND PROJECT LAYOUT SHEETS.

ISSUE FOR BID

FREESE AND NICHOLS, INC.
TEXAS REGISTERED ENGINEERING FIRM F-2144

STATE OF TEXAS
COURTNEY I CUNNINGHAM
141398
LICENSED PROFESSIONAL ENGINEER
04-11-2023

FREESE AND NICHOLS
801 Cherry Street, Suite 2800
Fort Worth, TX 76102
Phone - (817) 735-7300
Web - www.freese.com

SABINE RIVER AUTHORITY TOLEDO BEND FISHING TOURNAMENT SITE

ROADWAY AND DRAINAGE ENGINEERING DESIGN

CIVIL

ROADWAY & DRAINAGE PLAN SHEETS
STA 71+00 TO STA 81+00

NO.	ISSUES	BY	DATE

F&N JOB NO. OFF00000

DATE	00/00/00
DESIGNED	XXX
DRAWN	XXX
REVISED	XXX
CHECKED	XXX
FILE NAME	RWDYP_08.dgn

VERIFY SCALE Bar is one inch on original drawing. If not one inch on this sheet, adjust scale.

SHEET 1

SEQ.

MicroStation V8 User: freesepw11 Office: freesepw11\cs02\ICS_pdf_work_dir\3813\28159_8\RWDYP_08.dgn
Plotter: C:\Program Files\PDF Complete\pdfcmd.exe Plot Driver: PDF Complete
Plot Scale: 50.000 / 1 in. Model: Default
Date: Apr 03, 2023 - 11:01:29 PM Project: Freese and Nichols Inc.

Office: Date: Apr. 03, 2023 - 11:01:29 PM User: freesepw11 File: freesepw11\cs02\ICS_pdf_work_dir\3813\28159_8\RWDYP_08.dgn

LEGEND

EXIST. ROW

FLEXIBLE DELINEATOR

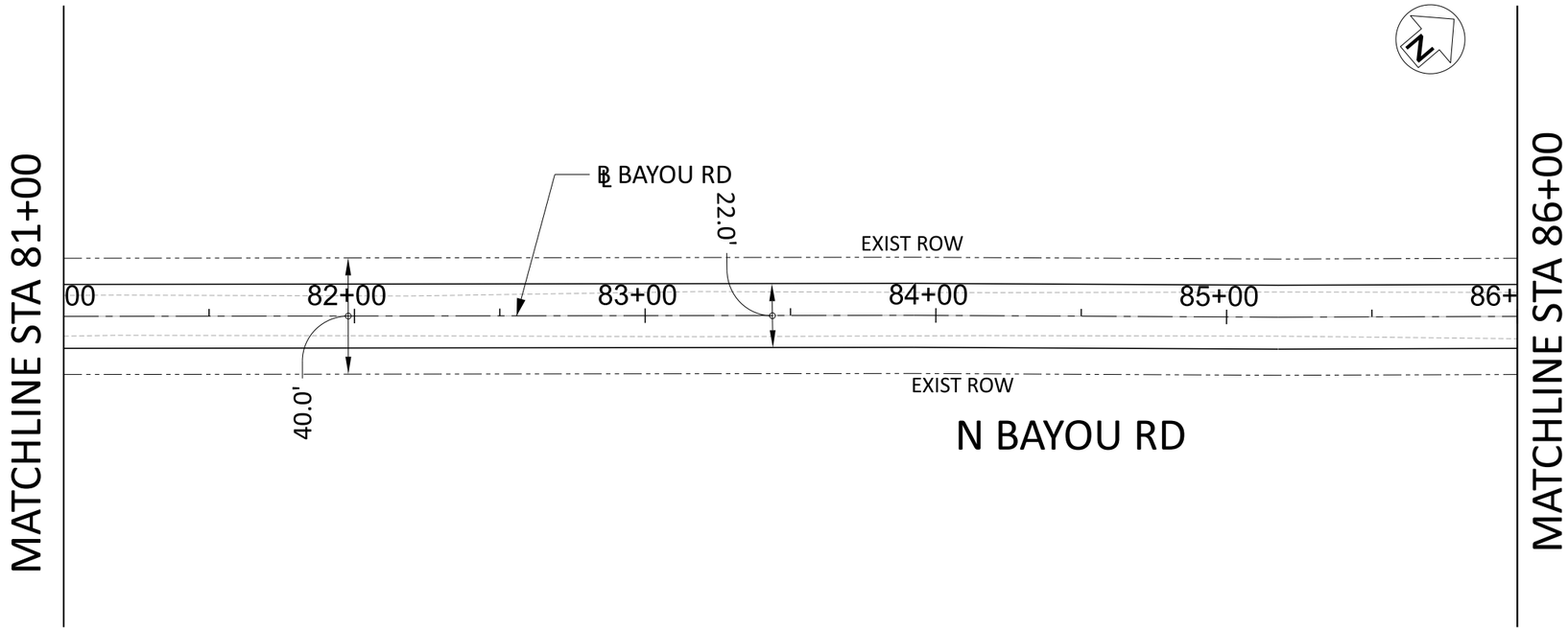

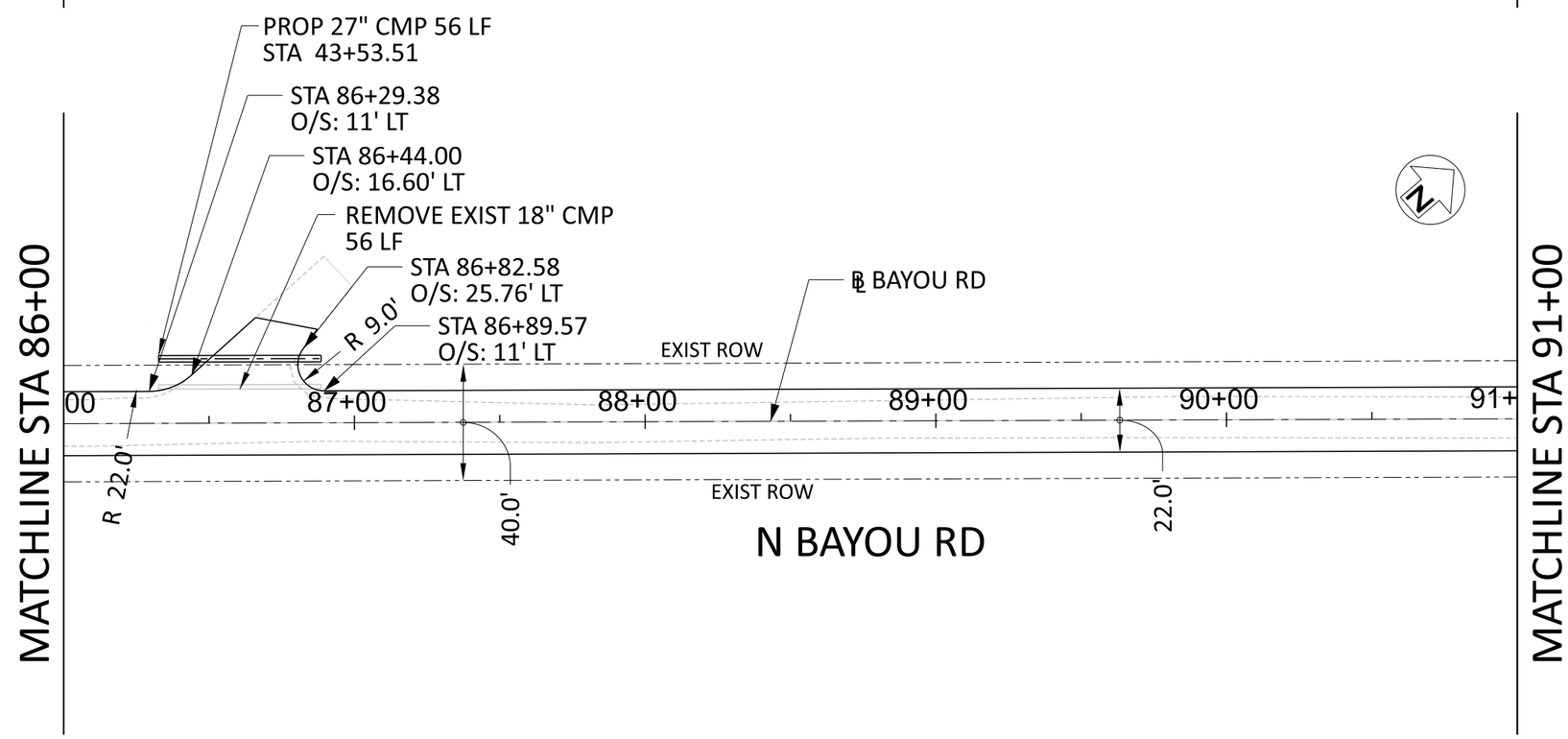

NOTE: GEOMETRIC AND CURVE DATA WILL BE SHOWN ON CONTROL SHEET AND PROJECT LAYOUT SHEETS.

ISSUE FOR BID

FREESE AND NICHOLS, INC.
TEXAS REGISTERED ENGINEERING FIRM F-2144

STATE OF TEXAS
COURTNEY I CUNNINGHAM
141398
LICENSED PROFESSIONAL ENGINEER
04-11-2023

FREESE AND NICHOLS
801 Cherry Street, Suite 2800
Fort Worth, TX 76102
Phone - (817) 735-7300
Web - www.freese.com

SABINE RIVER AUTHORITY TOLEDO BEND FISHING TOURNAMENT SITE

ROADWAY AND DRAINAGE ENGINEERING DESIGN

CIVIL

ROADWAY & DRAINAGE PLAN SHEETS
STA 81+00 TO STA 91+00

NO.	ISSUES	BY	DATE

F&N JOB NO.	OFF00000
DATE	00/00/00
DESIGNED	XXX
DRAWN	XXX
REVISED	XXX
CHECKED	XXX
FILE NAME	RWDYP_09.dgn

VERIFY SCALE Bar is one inch on original drawing. If not one inch on this sheet, adjust scale.
0 1

SHEET 1

SEQ.

MicroStation V8 User: freesepw11\ICS02
Workspace: freesepw11\ics02\ICS_pdf_work_dir\3813\28159_9\RWDYP_09.dgn
Plotter: C:\Program Files\Bentley\Common\Bin\Plotters\Default.pltr
Plot Scale: 50.000 : 1 in. Model: Default
Date: Apr. 03, 2023 - 11:00:59 PM Project: Freese and Nichols, Inc.

Office: Date: Apr. 03, 2023 - 11:00:59 PM User: freesepw11 File: ics02\freesepw11\ics02\ICS_pdf_work_dir\3813\28159_9\RWDYP_09.dgn

LEGEND

EXIST. ROW

FLEXIBLE DELINEATOR

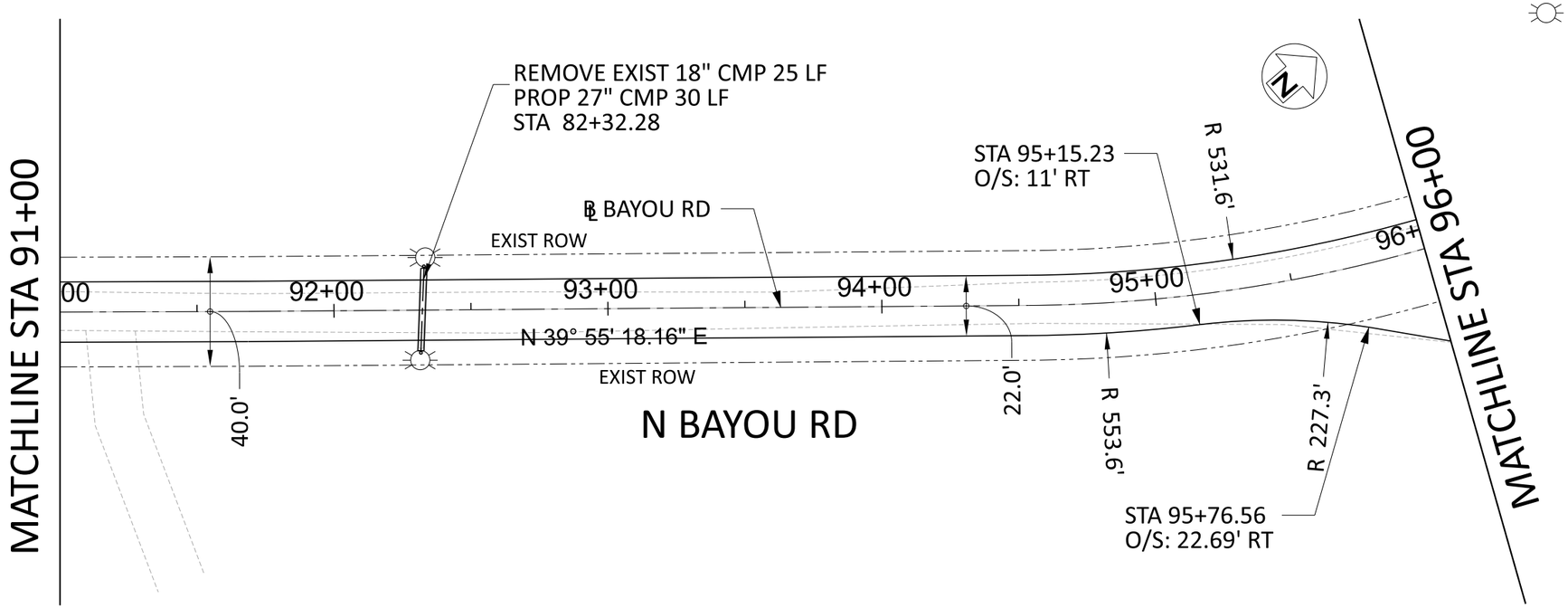

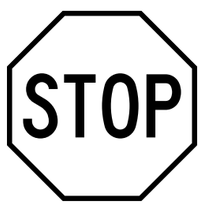

R1-1

R2-1

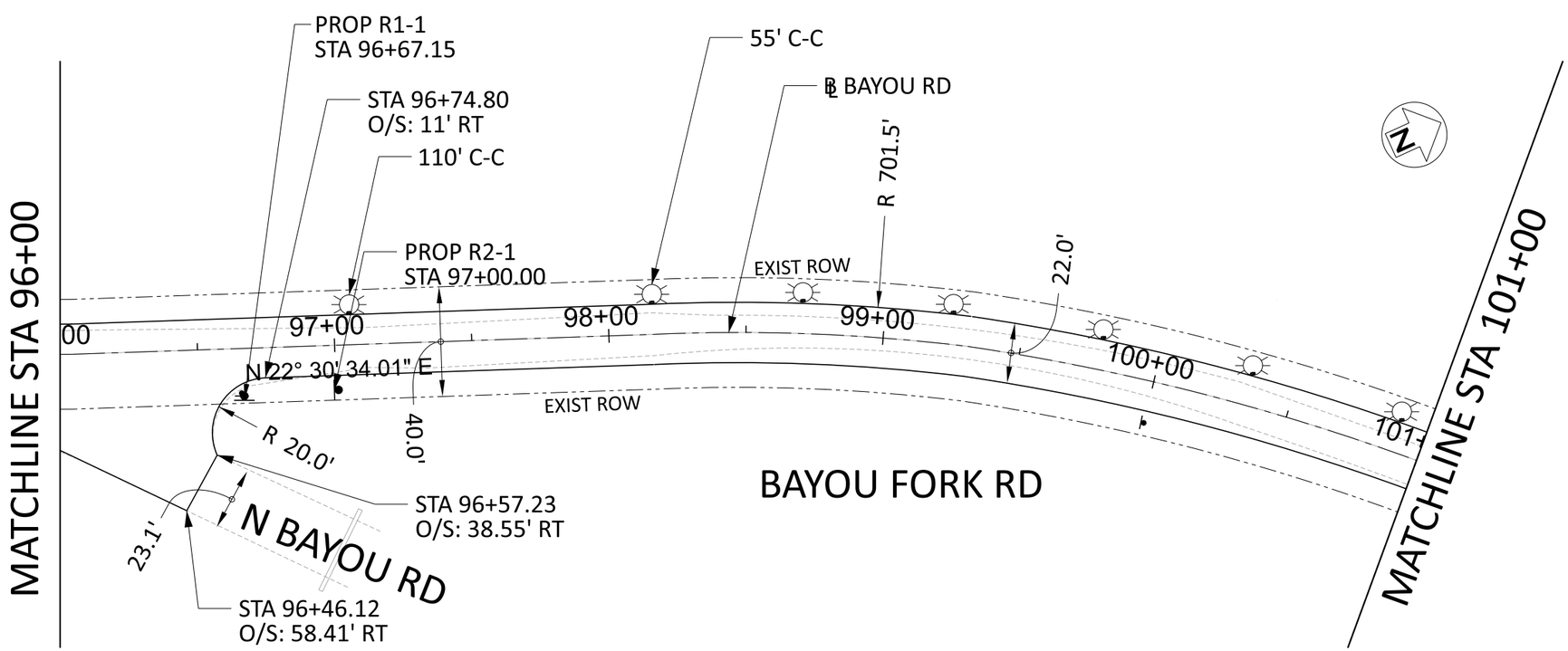

NOTE: GEOMETRIC AND CURVE DATA WILL BE SHOWN ON CONTROL SHEET AND PROJECT LAYOUT SHEETS.

ISSUE FOR BID

FREESE AND NICHOLS, INC.
TEXAS REGISTERED ENGINEERING FIRM F-2144

STATE OF TEXAS
COURTNEY I CUNNINGHAM
141398
LICENSED PROFESSIONAL ENGINEER
04-11-2023

FREESE AND NICHOLS
801 Cherry Street, Suite 2800
Fort Worth, TX 76102
Phone - (817) 735-7300
Web - www.freese.com

SABINE RIVER AUTHORITY TOLEDO BEND FISHING TOURNAMENT SITE

ROADWAY AND DRAINAGE ENGINEERING DESIGN

CIVIL

ROADWAY & DRAINAGE PLAN SHEETS
STA 91+00 TO STA 101+00

F&N JOB NO.	OFF00000
DATE	00/00/00
DESIGNED	XXX
DRAWN	XXX
REVISED	XXX
CHECKED	XXX
FILE NAME	RWDYP_10.dgn

NO.	ISSUES	BY	DATE

VERIFY SCALE Bar is one inch on original drawing. If not one inch on this sheet, adjust scale.
0 1

SHEET 1

SEQ.

MicroStation V8 User: freesepw11\ICS02
Plotter: C:\Program Files\Common Files\Bentley\Plotters\pltg
Plot Scale: 50.000 : 1 in.
Date: Apr. 03, 2023 - 11:01:25 PM
Model: Default
Project: Freese and Nichols, Inc.

Office: Date: Apr. 03, 2023 - 11:01:25 PM User: freesepw11\ICS02 File: C:\Bentley\Projects\freesepw11\ICS02\ICS_pdf_work_dir\3813\28159_10\RWDYP_10.dgn

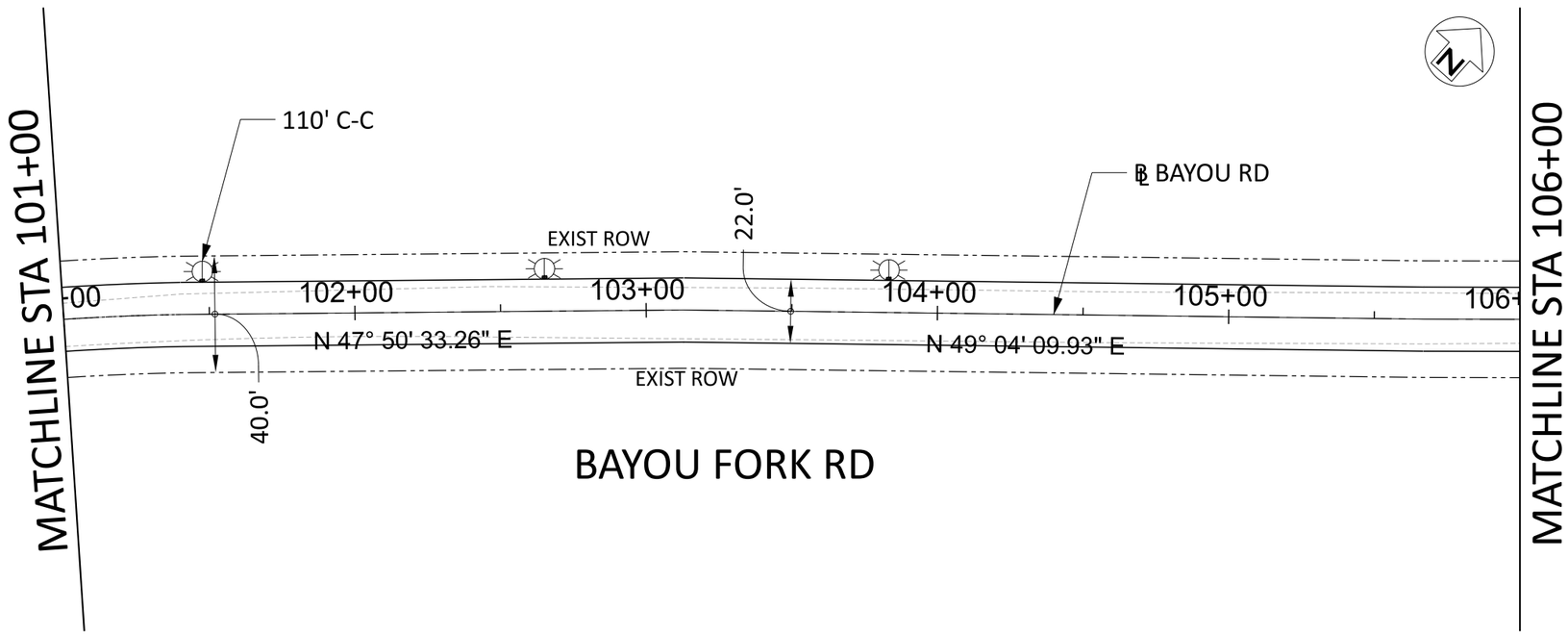

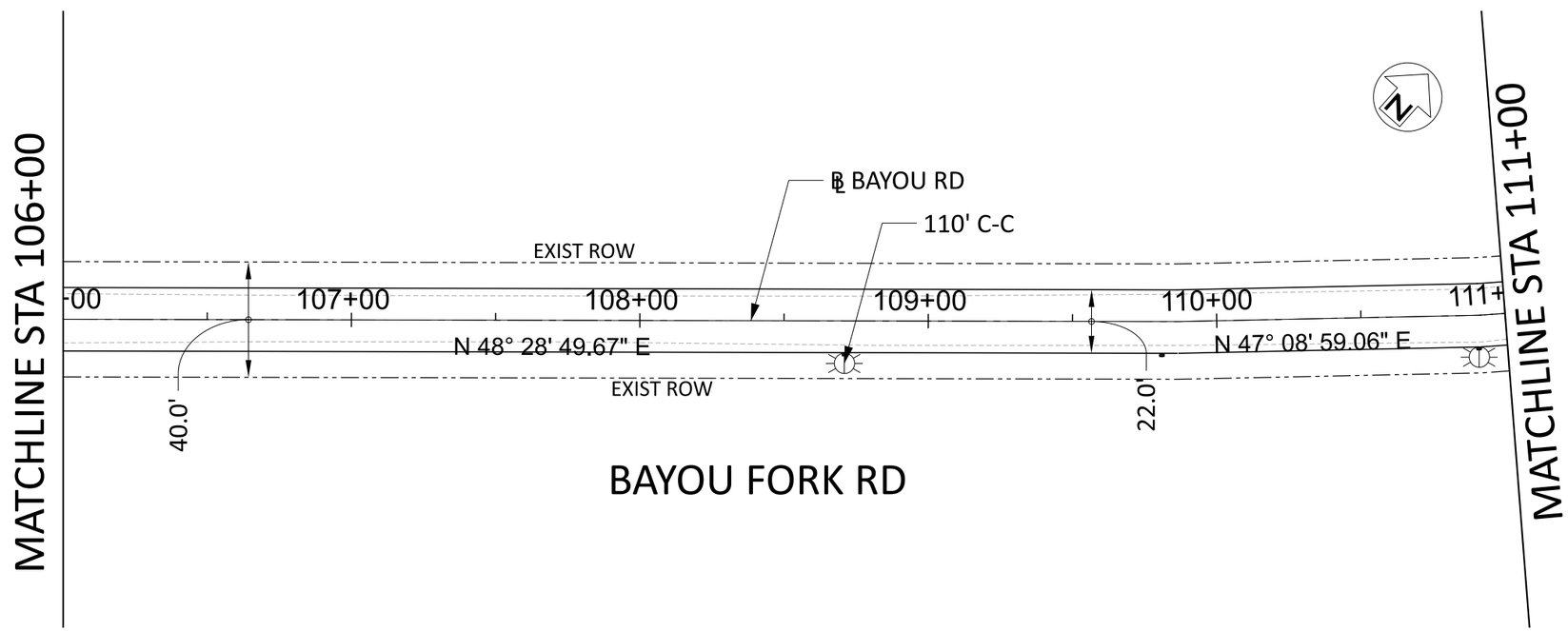

NOTE: GEOMETRIC AND CURVE DATA WILL BE SHOWN ON CONTROL SHEET AND PROJECT LAYOUT SHEETS.

LEGEND

EXIST. ROW

FLEXIBLE DELINEATOR

FREESE AND NICHOLS, INC.
TEXAS REGISTERED ENGINEERING FIRM F-2144

STATE OF TEXAS
COURTNEY I CUNNINGHAM
141398
LICENSED PROFESSIONAL ENGINEER
04-11-2023

FREESE AND NICHOLS
801 Cherry Street, Suite 2800
Fort Worth, TX 76102
Phone - (817) 735-7300
Web - www.freese.com

SABINE RIVER AUTHORITY TOLEDO BEND FISHING TOURNAMENT SITE

ROADWAY AND DRAINAGE ENGINEERING DESIGN

CIVIL

ROADWAY & DRAINAGE PLAN SHEETS
STA 101+00 TO STA 111+00

NO.	ISSUES	BY	DATE

FAN JOB NO. OFF00000
DATE 00/00/00
DESIGNED XXX
DRAWN XXX
REVISED XXX
CHECKED XXX
FILE NAME RWDYP_11.dgn

VERIFY SCALE Bar is one inch on original drawing. If not one inch on this sheet, adjust scale.
0 1

SHEET 1

SEQ.

ISSUE FOR BID

MicroStation V8 User: freesepw11\ICS02
File: \\freesepw11\ics02\ICS_pdf_work_dir\3813\28159_11\RWDYP_11.dgn
Plotter: C:\Pwworkdir\Plotters\Default.pltcfg
Plot Scale: 50.000 : 1 in.
Date: Apr. 03, 2023 - 11:02:23 PM
Model: Default
Project: Freese and Nichols, Inc.

Office: Date: Apr. 03, 2023 - 11:02:23 PM User: freesepw11 File: \\freesepw11\ics02\ICS_pdf_work_dir\3813\28159_11\RWDYP_11.dgn

LEGEND

EXIST. ROW

FLEXIBLE DELINEATOR

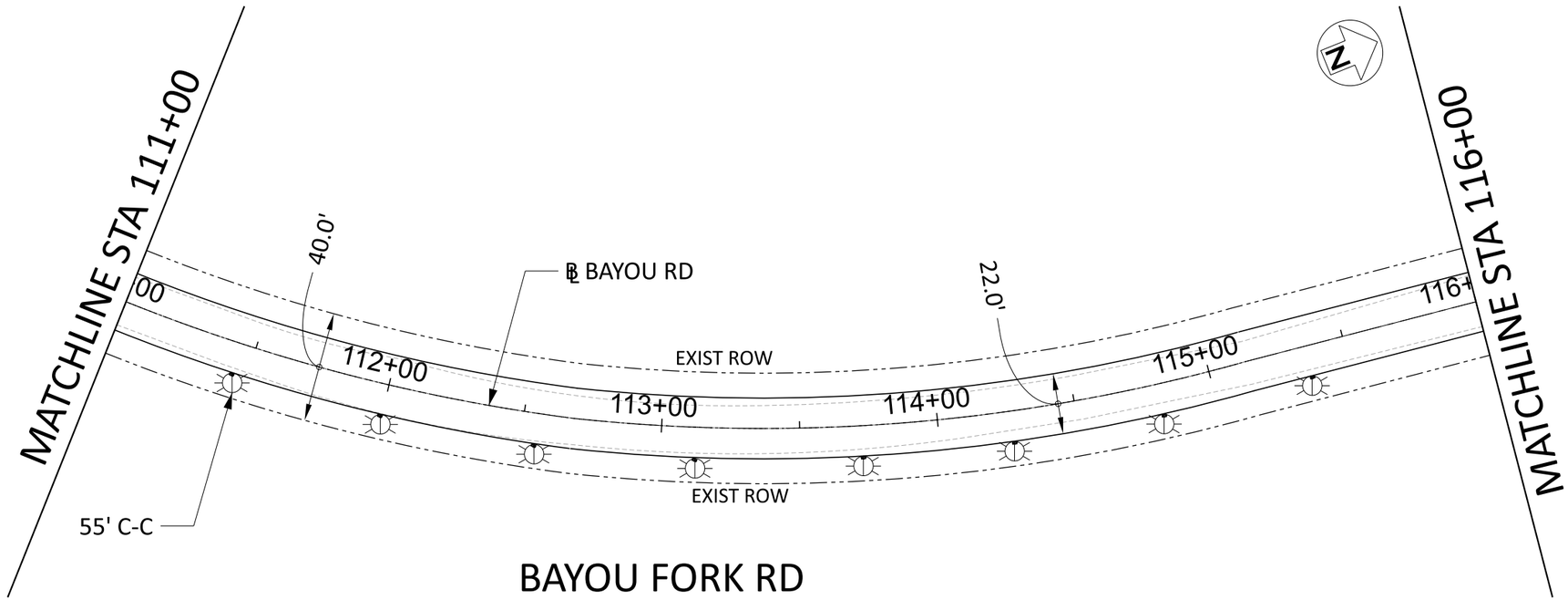

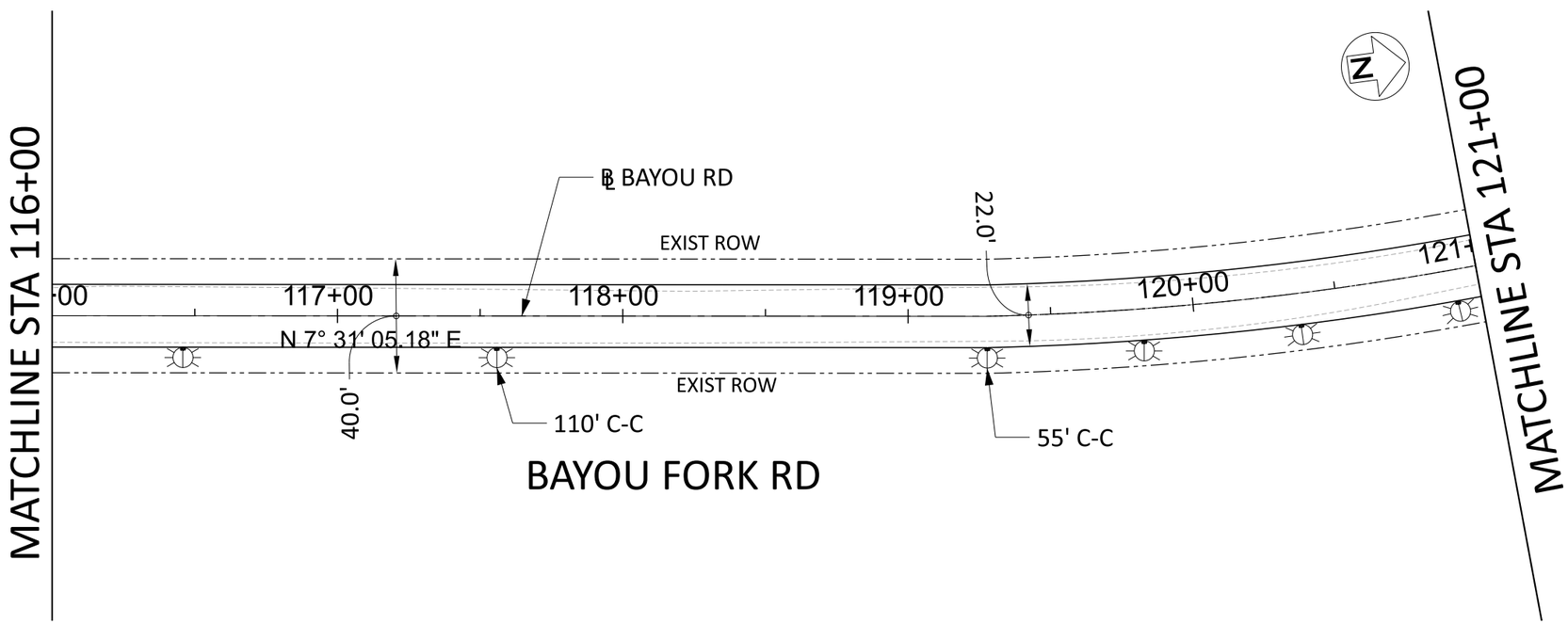

NOTE: GEOMETRIC AND CURVE DATA WILL BE SHOWN ON CONTROL SHEET AND PROJECT LAYOUT SHEETS.

ISSUE FOR BID

FREESE AND NICHOLS, INC.
TEXAS REGISTERED ENGINEERING FIRM F-2144

STATE OF TEXAS
COURTNEY I CUNNINGHAM
141398
LICENSED
PROFESSIONAL ENGINEER
04-11-2023

FREESE AND NICHOLS
801 Cherry Street, Suite 2800
Fort Worth, TX 76102
Phone - (817) 735-7300
Web - www.freese.com

SABINE RIVER AUTHORITY TOLEDO BEND FISHING TOURNAMENT SITE
ROADWAY AND DRAINAGE ENGINEERING DESIGN

CIVIL
ROADWAY & DRAINAGE PLAN SHEETS
STA 111+00 TO STA 121+00

F&N JOB NO.	OFF00000
DATE	00/00/00
DESIGNED	XXX
DRAWN	XXX
REVISED	XXX
CHECKED	XXX
FILE NAME	RWDYP_12.dgn

NO.	ISSUES	BY	DATE

VERIFY SCALE
0 1
Bar is one inch on original drawing.
If not one inch on this sheet, adjust scale.

SHEET 1

SEQ.

MicroStation V8 User: freesepw11lcs02\ICS_pdf_work_dir\3813\28159_14\RWDYP_12.dgn
Plotter: C:\Program Files (x86)\Common Files\InterPlot\PLOT\bin\jobdrvn.plt
Plot Scale: 50.000 ' / in.
Date: Apr. 03, 2023 - 11:02:00 PM
Model: Default
Project: Freese and Nichols, Inc.

Office: Date: Apr. 03, 2023 - 11:02:00 PM User: freesepw11lcs02\ICS_pdf_work_dir\3813\28159_14\RWDYP_12.dgn

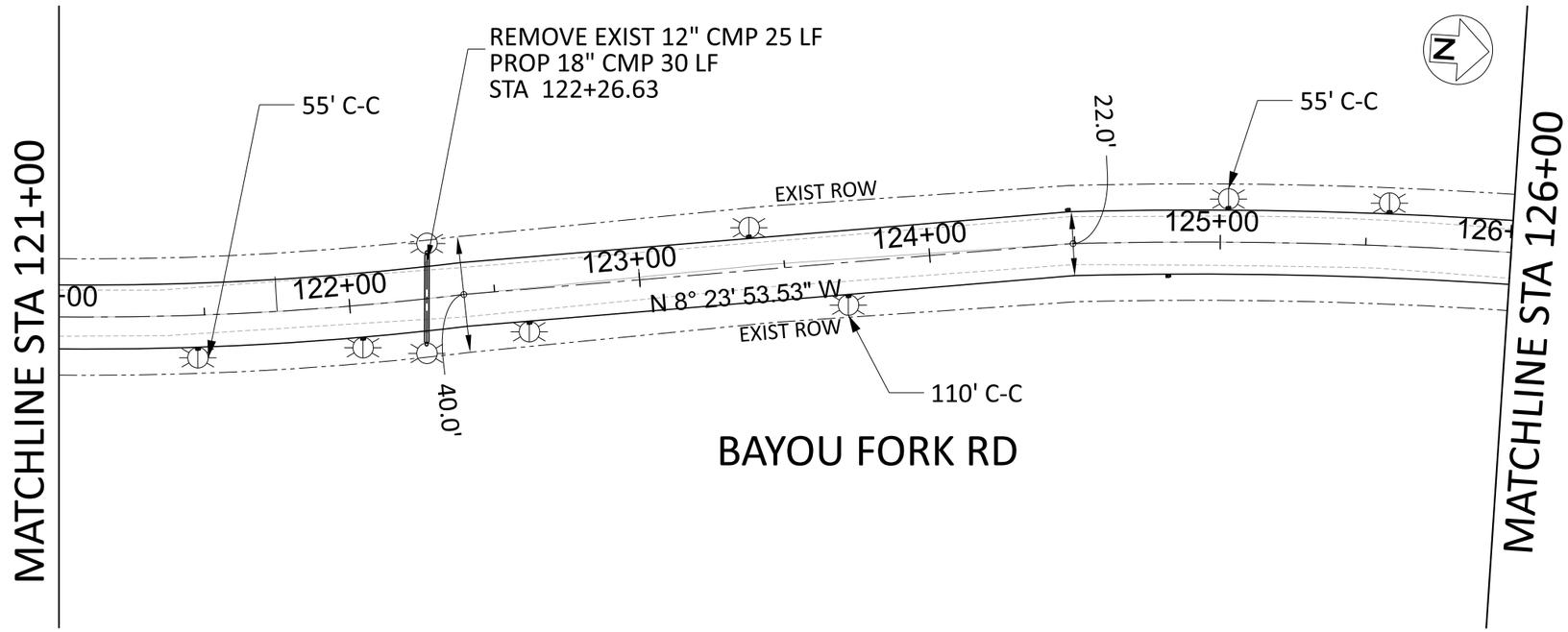

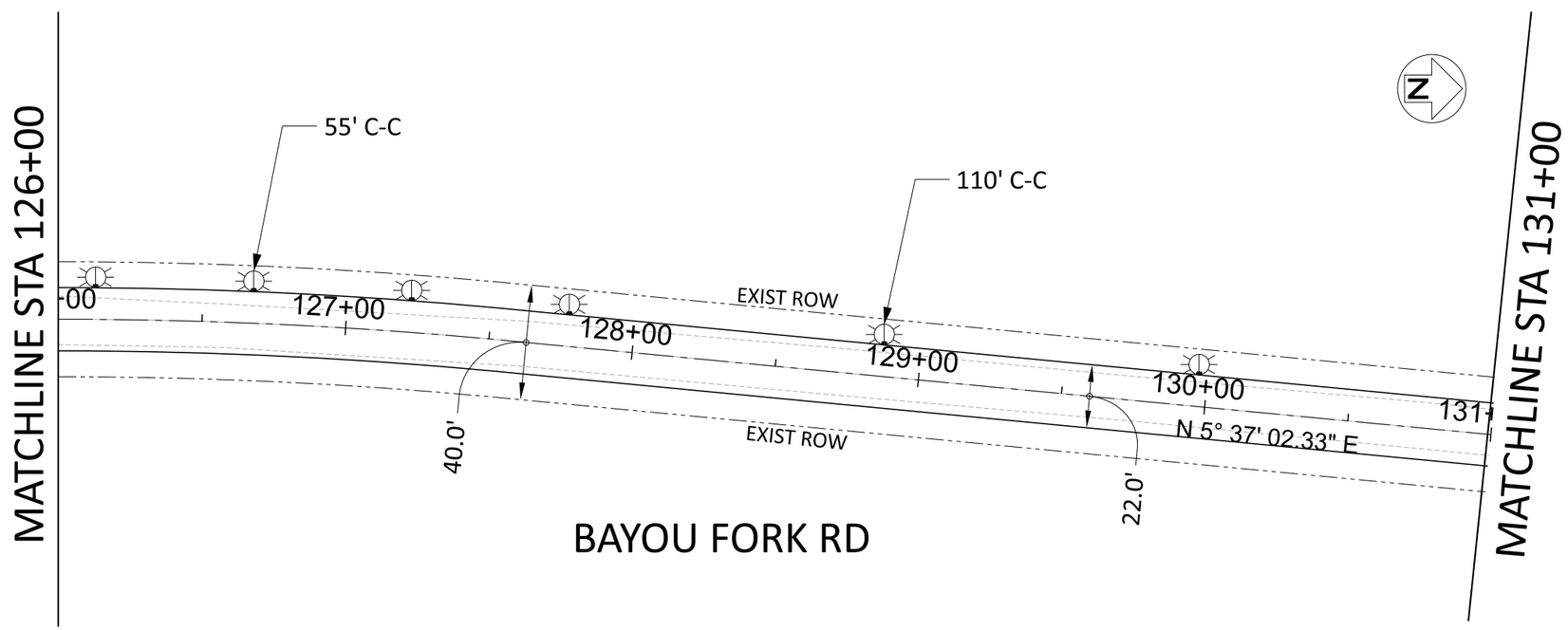

NOTE: GEOMETRIC AND CURVE DATA WILL BE SHOWN ON CONTROL SHEET AND PROJECT LAYOUT SHEETS.

LEGEND

EXIST. ROW

FLEXIBLE DELINEATOR

FREESE AND NICHOLS, INC.
TEXAS REGISTERED ENGINEERING FIRM F-2144

STATE OF TEXAS
COURTNEY I CUNNINGHAM
141398
LICENSED PROFESSIONAL ENGINEER
04-11-2023

FREESE AND NICHOLS
801 Cherry Street, Suite 2800
Fort Worth, TX 76102
Phone - (817) 735-7300
Web - www.freese.com

SABINE RIVER AUTHORITY TOLEDO BEND FISHING TOURNAMENT SITE

ROADWAY AND DRAINAGE ENGINEERING DESIGN

CIVIL

ROADWAY & DRAINAGE PLAN SHEETS
STA 121+00 TO STA 131+00

NO.	ISSUES	BY	DATE

F&N JOB NO. OFF00000
DATE 00/00/00
DESIGNED XXX
DRAWN XXX
REVISED XXX
CHECKED XXX
FILE NAME RWDYP_13.dgn

VERIFY SCALE
0 1
Bar is one inch on original drawing.
If not one inch on this sheet, adjust scale.

SHEET 1
SEQ.

ISSUE FOR BID

MicroStation V8 User: freesepw11
Office: freesepw11\ics02\ICS_pdf_work_dir\3813\28159_12\RWDYP_13.dgn
Plotter: C:\Program Files\PlotConfig\Resources\Fonts\Windows.pdf
Plot Scale: 50.000 / 1in.
Date: Apr 03, 2023 - 11:02:23 PM
Model: Default
Project: Freese and Nichols, Inc.

Office: Date: Apr. 03, 2023 - 11:02:23 PM User: freesepw11 File: freesepw11\ics02\ICS_pdf_work_dir\3813\28159_12\RWDYP_13.dgn

LEGEND

EXIST. ROW

FLEXIBLE DELINEATOR

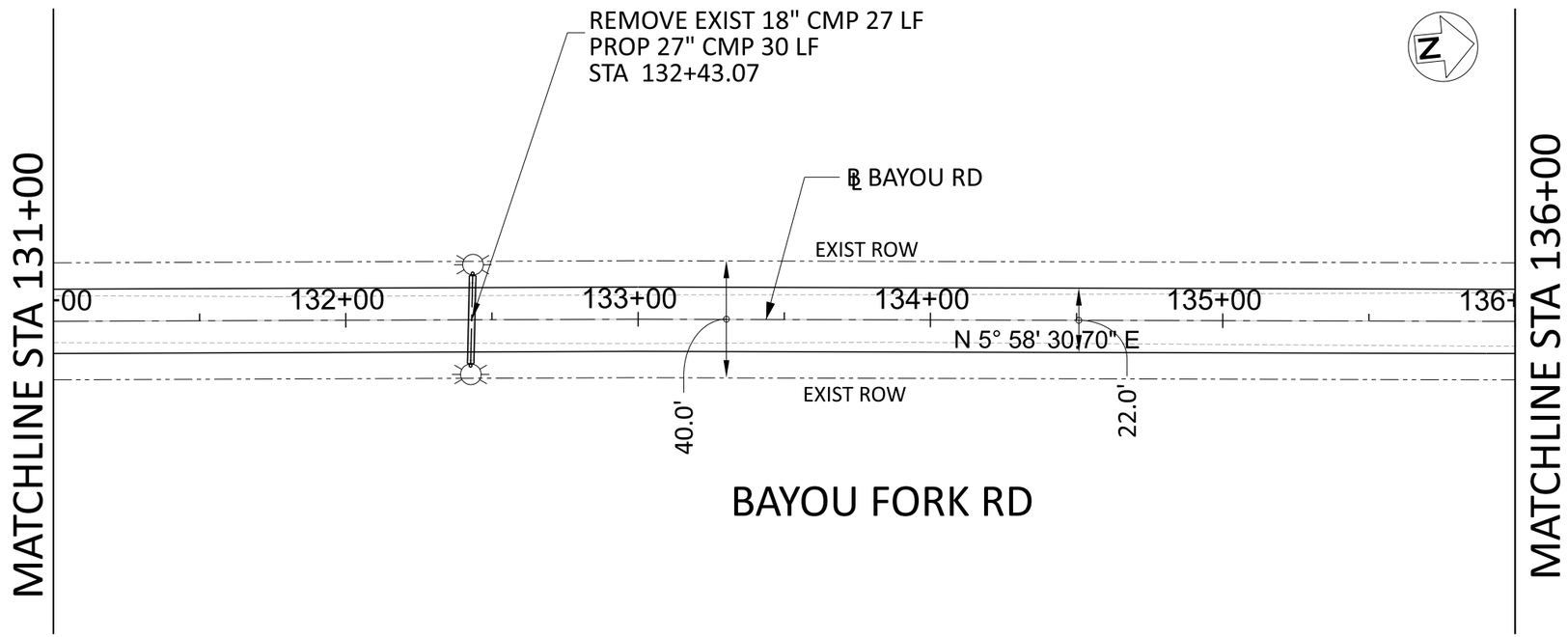

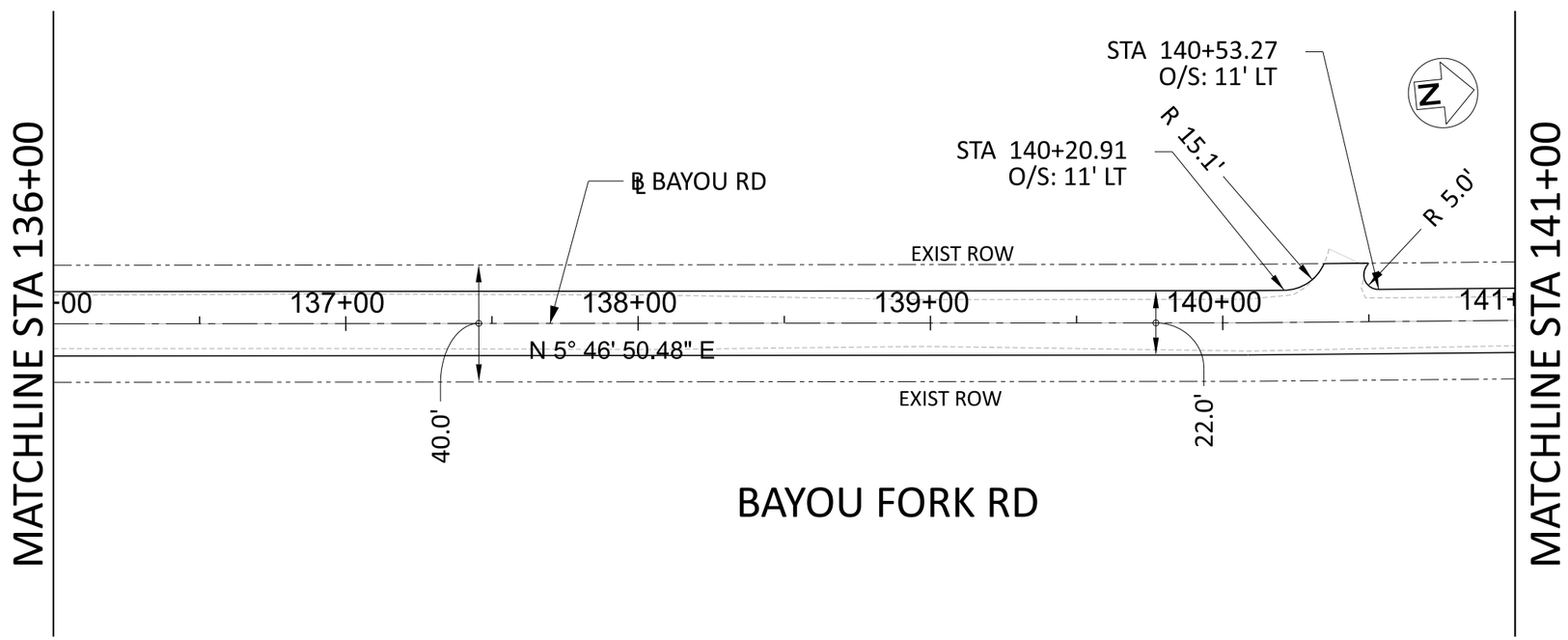

NOTE: GEOMETRIC AND CURVE DATA WILL BE SHOWN ON CONTROL SHEET AND PROJECT LAYOUT SHEETS.

ISSUE FOR BID

FREESE AND NICHOLS, INC.
TEXAS REGISTERED ENGINEERING FIRM F-2144

STATE OF TEXAS
COURTNEY I CUNNINGHAM
141398
LICENSED PROFESSIONAL ENGINEER
04-11-2023

FREESE AND NICHOLS
801 Cherry Street, Suite 2800
Fort Worth, TX 76102
Phone - (817) 735-7300
Web - www.freese.com

SABINE RIVER AUTHORITY TOLEDO BEND FISHING TOURNAMENT SITE

ROADWAY AND DRAINAGE ENGINEERING DESIGN

CIVIL

ROADWAY & DRAINAGE PLAN SHEETS
STA 131+00 TO STA 141+00

NO.	ISSUES	BY	DATE

F&N JOB NO. OFF00000
DATE 00/00/00
DESIGNED XXX
DRAWN XXX
REVISED XXX
CHECKED XXX
FILE NAME RWDYP_14.dgn

VERIFY SCALE 0 1"
Bar is one inch on original drawing.
If not one inch on this sheet, adjust scale.

SHEET 1

SEQ.

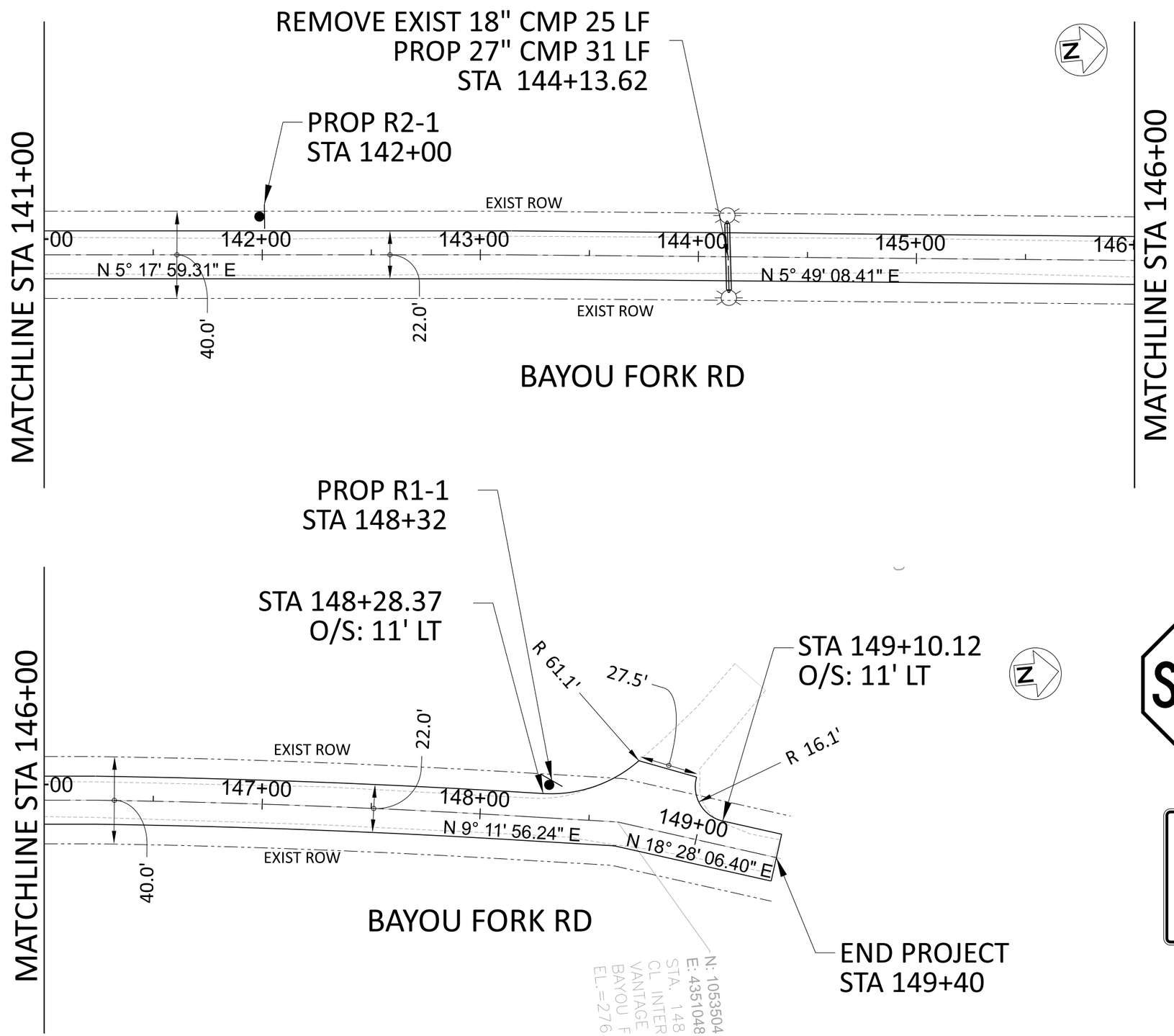

LEGEND

EXIST. ROW

FLEXIBLE DELINEATOR

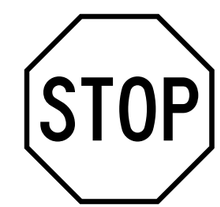

R1-1

R2-1

NOTE: GEOMETRIC AND CURVE DATA WILL BE SHOWN ON CONTROL SHEET AND PROJECT LAYOUT SHEETS.

ISSUE FOR BID

FREESE AND NICHOLS, INC.
TEXAS REGISTERED ENGINEERING FIRM F-2144

STATE OF TEXAS
COURTNEY I CUNNINGHAM
141398
LICENSED PROFESSIONAL ENGINEER
04-11-2023

FREESE AND NICHOLS
801 Cherry Street, Suite 2800
Fort Worth, TX 76102
Phone - (817) 735-7300
Web - www.freese.com

SABINE RIVER AUTHORITY TOLEDO BEND FISHING TOURNAMENT SITE

ROADWAY AND DRAINAGE ENGINEERING DESIGN

CIVIL

ROADWAY & DRAINAGE PLAN SHEETS
STA 141+00 TO END

FAN JOB NO.	OFF00000
DATE	00/00/00
DESIGNED	XXX
DRAWN	XXX
REVISED	XXX
CHECKED	XXX
FILE NAME	RWDYP_15.dgn

NO.	ISSUES	BY	DATE

VERIFY SCALE Bar is one inch on original drawing. If not one inch on this sheet, adjust scale.
0 1

SHEET 1

SEQ.

MicroStation V8 User: freesepw11\ICS02
Plotter: C:\Pwworking\freesepw11\ics02\ICS_pdf_work_dir\3813\28159_15\RWDYP_15.dgn
Plot Scale: 50.000 : 1 in. Model: Default
Date: Apr. 03, 2023 - 11:02:40 PM Project: Freese and Nichols, Inc.

Office: Date: Apr. 03, 2023 - 11:02:40 PM User: freesepw11\ics02 File: C:\Pwworking\freesepw11\ics02\ICS_pdf_work_dir\3813\28159_15\RWDYP_15.dgn

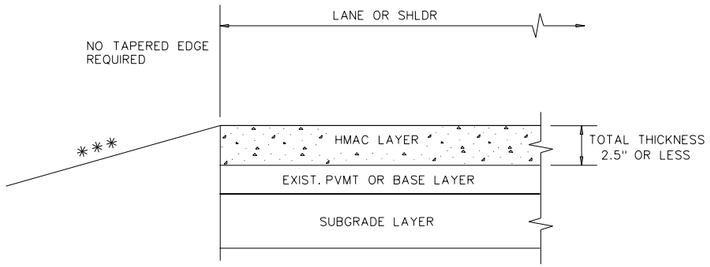

*** SEE TYPICAL SECTION FOR ROADSIDE DETAILS

CONDITION - 1

THIN HMAC SURFACES OR HMAC OVERLAY WITH THICKNESS OF 2.5" OR LESS

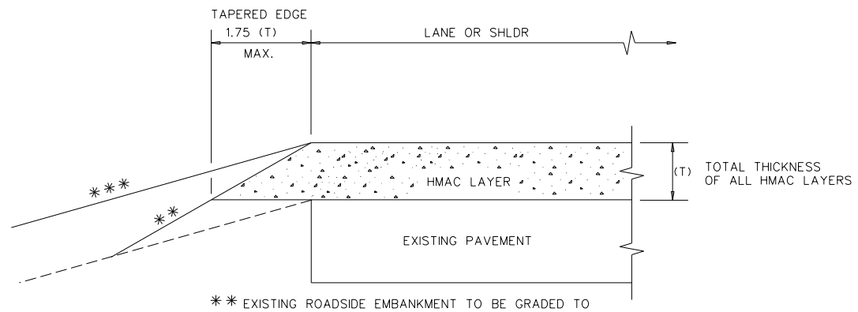

** EXISTING ROADSIDE EMBANKMENT TO BE GRADED TO PRODUCE A SMOOTH LEVEL SURFACE FOR PLACEMENT OF TAPERED EDGE. THIS WORK IS SUBSIDIARY TO THE VARIOUS BID ITEMS.

*** SEE TYPICAL SECTION FOR ROADSIDE DETAILS

CONDITION - 2

OVERLAY OF EXISTING PAVEMENT
HMAC THICKNESS 2.5" TO 5"

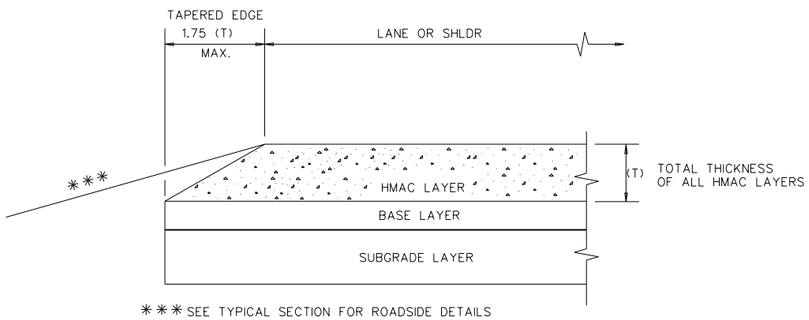

*** SEE TYPICAL SECTION FOR ROADSIDE DETAILS

CONDITION - 3

NEW OR RECONSTRUCTED PAVEMENT
HMAC THICKNESS 2.5" TO 5"

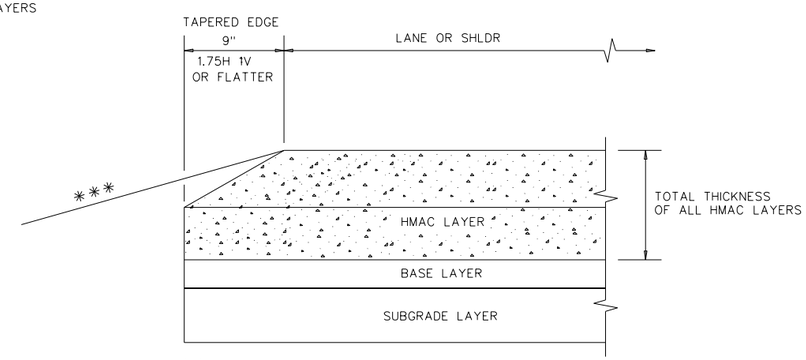

*** SEE TYPICAL SECTION FOR ROADSIDE DETAILS

CONDITION - 4

NEW OR RECONSTRUCTED PAVEMENT
HMAC THICKNESS 5" OR GREATER

(NOT TO SCALE)

GENERAL NOTES

1. UNLESS OTHERWISE SHOWN IN THE PLANS, A VERTICAL EDGE IS PERMISSIBLE FOR HMAC PLACED GREATER THAN 5" BELOW THE EDGE OF PAVEMENT AND FOR THICKNESS OF HMAC LESS THAN 2.5".
2. FOR FURTHER INFORMATION REGARDING THE ROADSIDE AND PAVEMENT DETAILS, SEE TYPICAL SECTIONS.
3. PAYMENT FOR TAPERED EDGE WILL BE IN ACCORDANCE WITH APPLICABLE ITEMS IN THE CONTRACT.
4. THE SLOPE OF THE TAPERED EDGE SHALL BE 1.75H 1V OR FLATTER.
5. THE TAPERED EDGE SHALL BE PRODUCED BY USE OF A SCREED ATTACHMENT CAPABLE OF PRODUCING A SMOOTH COMPACTED SURFACE. ADDITIONAL COMPACTING EFFORT BEHIND THE SCREED IS NOT REQUIRED.

FREESE AND NICHOLS, INC.
TEXAS REGISTERED OWNERSHIP FIRM F-2144

STATE OF TEXAS
COURTNEY I CUNNINGHAM
141398
LICENSED PROFESSIONAL ENGINEER
04-11-2023

FREESE AND NICHOLS
801 Cherry Street, Suite 2800
Fort Worth, TX 76102
Phone - (817) 735-7300
Web - www.freese.com

SABINE RIVER AUTHORITY TOLEDO BEND FISHING TOURNAMENT SITE

ROADWAY AND DRAINAGE ENGINEERING DESIGN

ROADWAY & DRAINAGE DETAILS 01

NO.	ISSUES	BY	DATE

F&N JOB NO. OFF00000
DATE 00/00/00
DESIGNED
DRAWN
REVISED
CHECKED
FILE NAME RDWY_DRAIN_DETAILS 01

VERIFY SCALE Bar is one inch on original drawing. If not one inch on this sheet, adjust scale.
0 1

SHEET

SEQ.

ISSUE FOR BID

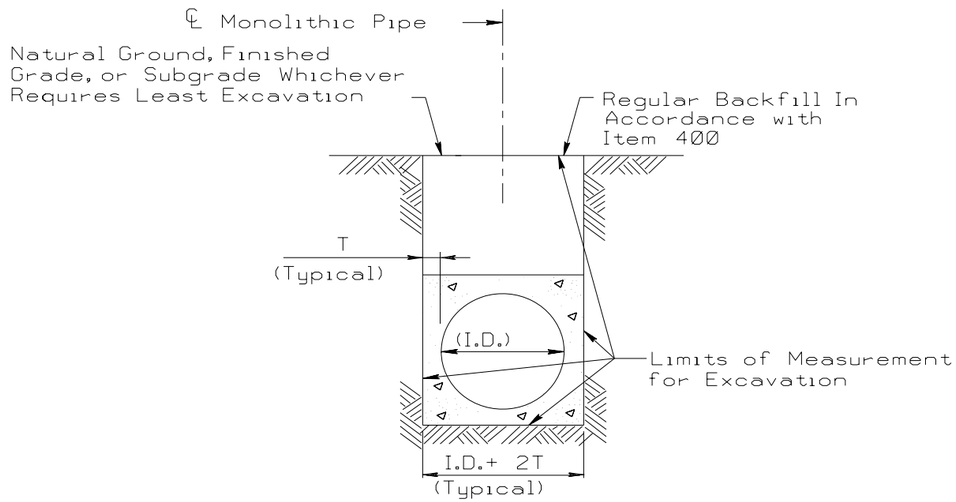

EXCAVATION DETAIL

MONOLITHIC PIPE IN A PAVED OR GRADED AREA

REINFORCED CONCRETE PIPE

EXCAVATION AND BACKFILL QUANTITIES			
PIPE DIA.	T	CULVERT OR SEWER EXCAVATION IN A PAVED OR GRADED AREA	CEMENT STABILIZED BACKFILL IN A PAVED OR GRADED AREA
IN.	FT.	C.Y.PER L.F.PER FT.OF DEPTH	C.Y.PER L.F. OF PIPE
18	0.19	0.144	0.383
24	0.23	0.165	0.478
30	0.29	0.188	0.586
36	0.33	0.210	0.692
42	0.38	0.231	0.808
48	0.42	0.327	1.394
54	0.46	0.349	1.560
60	0.50	0.370	1.731
66	0.54	0.392	1.907
72	0.58	0.414	2.088
78	0.62	0.435	2.275
84	0.67	0.457	2.474

MONOLITHIC PIPE

EXCAVATION QUANTITIES		
PIPE DIA.	T	EXCAVATION
IN.	FT.	C.Y.PER L.F.PER FT.OF DEPTH
36	0.417	0.142
42	0.458	0.164
48	0.458	0.182
54	0.500	0.204
60	0.583	0.228
66	0.583	0.247
72	0.625	0.269
78	0.625	0.287
84	0.625	0.306

NOTE:

Cement stabilized backfill may be omitted in private driveways as indicated elsewhere in the plans.

- Backfill with cement stabilized material will be required for all structures under detours unless noted otherwise in the General Notes.

D = Depth
H = Height
T = Thickness
R = Radius
Dia = Diameter

ISSUE FOR BID

FREESE AND NICHOLS, INC.
TEXAS REGISTERED ENGINEERING FIRM F-2144

STATE OF TEXAS
COURTNEY I CUNNINGHAM
141398
LICENSED PROFESSIONAL ENGINEER
04-11-2023

FREESE AND NICHOLS
801 Cherry Street, Suite 2800
Fort Worth, TX 76102
Phone - (817) 735-7300
Web - www.freese.com

SABINE RIVER AUTHORITY TOLEDO BEND FISHING TOURNAMENT SITE
ROADWAY AND DRAINAGE ENGINEERING DESIGN
ROADWAY & DRAINAGE DETAILS 02

NO.	ISSUES	BY	DATE

F&N JOB NO. OFF00000
DATE 00/00/00
DESIGNED
DRAWN
REVISED
CHECKED
FILE NAME RDWY_DRAIN_DETAILS 02

VERIFY SCALE Bar is one inch on original drawing. If not one inch on this sheet, adjust scale.
0 1

SHEET

SEQ.

MicroStation V8 User: 03952 Office:
pw:\\freese-pw.bentley.com:freese-pw-01\Documents\FNI - Texas\SRA22771 (Transportation)\2 Drawings\2.04 Infrastructure\2.04.02 Sheets\2.04.02.13 Standards\Roadway Standards\RDWY_DRAIN_DETAILS 02
Plotter: c:\pwworking\pw-freese-pw-01\dms22771\dms22771.pltg Model: Default
Plot Scale: 1.7172 Ft / In. Project:Freese and Nichols, Inc.
Date: Apr. 11, 2023 - 02:50:28 PM

DELINEATORS

	SINGLE	
DEVICE	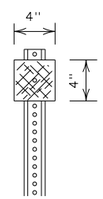 1-Size 2 reflector unit	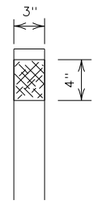 1-Size 1 reflector unit
SHEETING	Yellow, White or Red Type B or C Reflective Sheeting	
POST TYPE	WC	YFLX, WFLX
MOUNT TYPE	GND	GND, SRF

DEPARTMENTAL MATERIAL SPECIFICATIONS	
FLEXIBLE DELINEATOR & OBJECT MARKER POSTS (EMBEDDED & SURFACE MOUNT TYPES)	DMS-4400
SIGN FACE MATERIALS	DMS-8300
DELINEATORS, OBJECT MARKERS AND BARRIER REFLECTORS	DMS-8600

NOTE:

Delineator and object marker substrates and sign substrates shall be 0.080" Aluminum sign blank to conform to ASTM B-209 Alloy 6061-T6 or approved alternative.

POST TYPE AND SUPPORT FOUNDATION DETAILS

FLEXIBLE POSTS (YFLX, WFLX)

GND

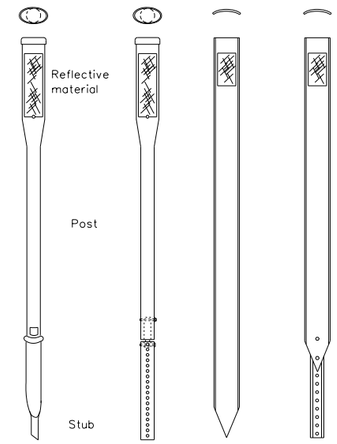

EMBEDDED

NOTES

1. See "Flexible Delineator and Object Marker Posts" Material Producer List for approved devices.
2. Install per manufacturer's recommendations.
3. Post length may vary to meet field conditions.
4. When using yellow delineators with flexible posts to separate opposing direction of travel, such as centerline or median use, the flexible posts shall be yellow.

MINIMUM WARNING DEVICES AT CURVES WITH ADVISORY SPEEDS

Amount by which Advisory Speed is less than Posted Speed	Curve Advisory Speed	
	Turn (30 MPH or less)	Curve (35 MPH or more)
5 MPH & 10 MPH	• RPMs	• RPMs
15 MPH & 20 MPH	• RPMs and One Direction Large Arrow sign	• RPMs and Chevrons; or • RPMs and One Direction Large Arrow sign where geometric conditions or roadside obstacles prevent the installation of chevrons.
25 MPH & more	• RPMs and Chevrons; or • RPMs and One Direction Large Arrow sign where geometric conditions or roadside obstacles prevent the installation of chevrons	• RPMs and Chevrons

SUGGESTED SPACING FOR DELINEATORS ON HORIZONTAL CURVES

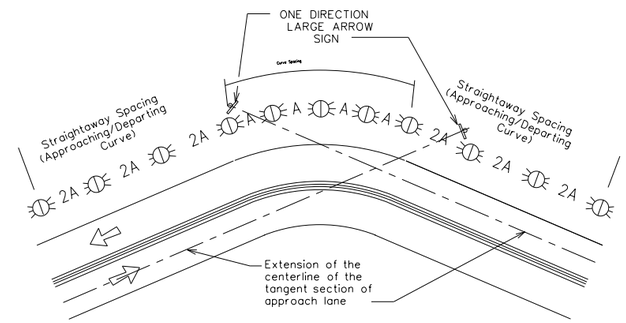

NOTE

ONE DIRECTION LARGE ARROW (W1-6) sign should be located at approximately and perpendicular to the extension of the centerline of the tangent section of approach lane.

DELINEATOR AND CHEVRON SPACING

WHEN DEGREE OF CURVE OR RADIUS IS NOT KNOWN

Advisory Speed (MPH)	Spacing in Curve	Spacing in Straightaway	Chevron Spacing in Curve
	A	2xA	B
65	130	260	200
60	110	220	160
55	100	200	160
50	85	170	160
45	75	150	120
40	70	140	120
35	60	120	120
30	55	110	80
25	50	100	80
20	40	80	80
15	35	70	40

If the degree of curve is not known, delineator spacing may be determined based on the Advisory Speed of the curve. Use the delineator curve spacing for each Advisory Speed (MPH).

FREESE AND NICHOLS, INC.
TEXAS REGISTERED ENGINEERING FIRM F-2144
STATE OF TEXAS
COURTNEY L CUNNINGHAM
141398
LICENSED PROFESSIONAL ENGINEER
04-11-2023
FREESE AND NICHOLS
801 Cherry Street, Suite 2800
Fort Worth, TX 76102
Phone - (817) 735-7300
Web - www.freese.com

SABINE RIVER AUTHORITY TOLEDO BEND FISHING TOURNAMENT SITE

ROADWAY AND DRAINAGE ENGINEERING DESIGN

SIGNING AND PAVEMENT MARKINGS DETAILS 01

F&N JOB NO.	OFF00000
DATE	00/00/00
DESIGNED	
DRAWN	
REVISED	
CHECKED	
FILE NAME	SS01

NO.	ISSUES	BY	DATE

VERIFY SCALE Bar is one inch on original drawing. If not one inch on this sheet, adjust scale.

SHEET

SEQ.

ISSUE FOR BID

SIGN LOCATION

PAVED SHOULDERS

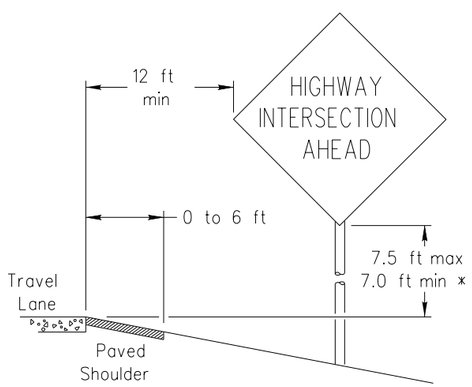

LESS THAN 6 FT. WIDE

When the shoulder is 6 ft. or less in width, the sign must be placed at least 12 ft. from the edge of the travel lane.

TYPICAL SIGN ATTACHMENT DETAIL

Single Signs

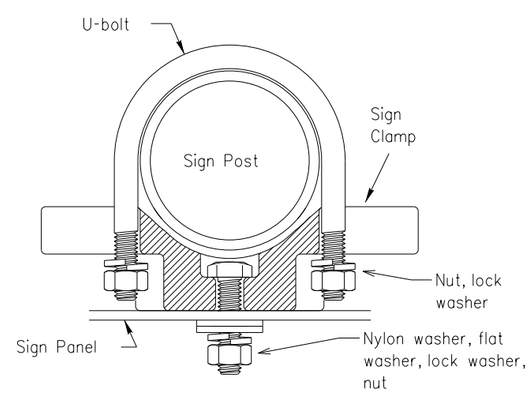

Bolts used to mount sign panels to the clamp are 5/16-18 UNC galvanized square head with nut, nylon washer, flat washer and lock washer. The bolt length is 1 inch for aluminum.

When two sign clamps are used to mount signs back-to-back, use a 5/16-18 UNC galvanized hex head per ASTM A307 with nut and helical-spring lock washer. The approximate bolt lengths for various post sizes and sign clamp types are given in the table at right. The bolt length may need to be adjusted depending upon field conditions.

Sign clamps may be either the specific size clamp or the universal clamp.

Back-to-Back Signs

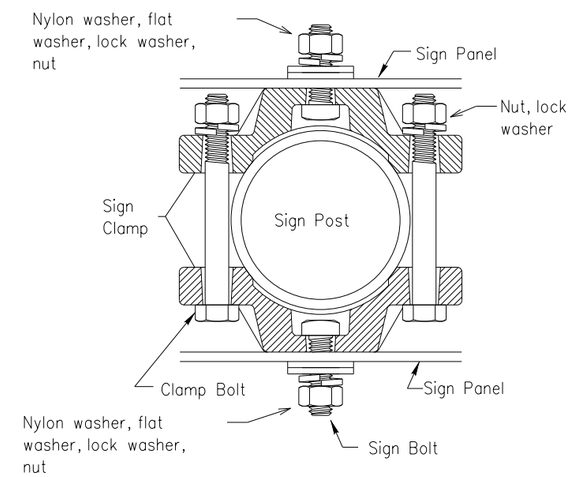

Pipe Diameter	Approximate Bolt Length	
	Specific Clamp	Universal Clamp
2" nominal	3"	3 or 3 1/2"
2 1/2" nominal	3 or 3 1/2"	3 1/2 or 4"
3" nominal	3 1/2 or 4"	4 1/2"

ISSUE FOR BID

FREESE AND NICHOLS, INC.
TEXAS REGISTERED ENGINEERING FIRM F-2144

STATE OF TEXAS
COURTNEY I CUNNINGHAM
141398
LICENSED PROFESSIONAL ENGINEER
04-11-2023

FREESE AND NICHOLS
801 Cherry Street, Suite 2800
Fort Worth, TX 76102
Phone - (817) 735-7300
Web - www.freese.com

SABINE RIVER AUTHORITY TOLEDO BEND FISHING TOURNAMENT SITE
ROADWAY AND DRAINAGE ENGINEERING DESIGN
SIGNING AND PAVEMENT MARKINGS DETAILS 02

F&N JOB NO. OFF00000
DATE 00/00/00
DESIGNED
DRAWN
REVISED
CHECKED
FILE NAME SS02

NO. ISSUES | BY | DATE

VERIFY SCALE Bar is one inch on original drawing. If not one inch on this sheet, adjust scale.
0 1

SHEET

SEQ.

MicroStation V8 User: 03952 Office:
pw:\\freese-pw.bentley.com:freese-pw-01\Documents\FNI - Texas\SRA22771 (Transportation)\2 Drawings\2.04 Infrastructure\2.04.02 Sheets\2.04.02.13 Standards\Roadway Standards\SS02
Plotter: c:\pwworking\freese-pw-01\d0952\dms_verify.cfg Driver: PDF Version: 8.11 Width: Wide Orientation: Landscape
Plot Scale: 0.2.1141 FT.IN. Model: Default
Date: Apr. 11, 2023 - 02:53:01 PM Project: Freese and Nichols, Inc.

TRIANGULAR SLIPBASE INSTALLATION GENERAL REQUIREMENTS

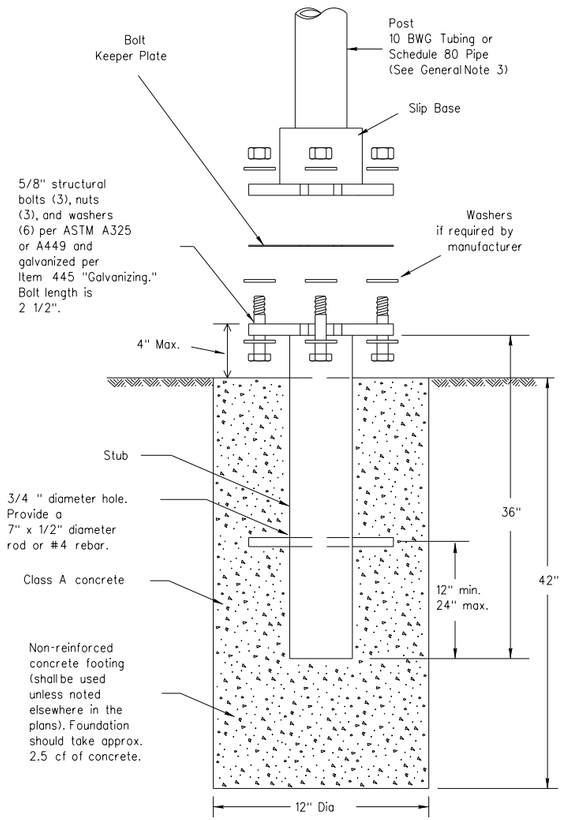

SM RD SGN ASSM TY XXXXX(X)SA(X-XXXX)

NOTE

There are various devices approved for the Triangular Slipbase System. Please reference the Material Producer List for approved slip base systems. http://www.txdot.gov/business/producer list.htm_ The devices shall be installed per manufacturers' recommendations. Installation procedures shall be provided to the Engineer by Contractor.

GENERAL NOTES:

1. Slip base shall be permanently marked to indicate manufacturer. Method, design, and location of marking are subject to approval of the TxDOT Traffic Standards Engineer.
2. Material used as post with this system shall conform to the following specifications:
   - 10 BWG Tubing (2.875" outside diameter)
     - 0.134" nominal wall thickness
     - Seamless or electric-resistance welded steel tubing or pipe
     - Steel shall be HSLAS Gr 55 per ASTM A1011 or ASTM A1008
     - Other steels may be used if they meet the following:
       - 55,000 PSI minimum yield strength
       - 70,000 PSI minimum tensile strength
       - 20% minimum elongation in 2"
     - Wall thickness (uncoated) shall be within the range of 0.122" to 0.138"
     - Outside diameter (uncoated) shall be within the range of 2.867" to 2.883"
     - Galvanization per ASTM A123 or ASTM A653 G210. For precoated steel tubing (ASTM A653), recoat tube outside diameter weld seam by metallizing with zinc wire per ASTM B833.
   - Schedule 80 Pipe (2.875" outside diameter)
     - 0.276" nominal wall thickness
     - Steel tubing per ASTM A500 Gr C
     - Other seamless or electric-resistance welded steel tubing or pipe with equivalent outside diameter and wall thickness may be used if they meet the following:
       - 46,000 PSI minimum yield strength
       - 62,000 PSI minimum tensile strength
       - 21% minimum elongation in 2"
     - Wall thickness (uncoated) shall be within the range of 0.248" to 0.304"
     - Outside diameter (uncoated) shall be within the range of 2.855" to 2.895"
     - Galvanization per ASTM A123
3. See the Traffic Operations Division website for detailed drawings of sign clamps and Texas Universal Triangular Slipbase System components. The website address is:
   http://www.txdot.gov/publications/traffic.htm
4. Sign supports shall not be spliced except where shown. Sign support posts shall not be spliced.

ASSEMBLY PROCEDURE

Foundation

1. Prepare 12-inch diameter by 42-inch deep hole. If solid rock is encountered, the depth of the foundation may be reduced such that it is embedded a minimum of 18 inches into the solid rock.
2. The Engineer may permit batches of concrete less than 2 cubic yards to be mixed with a portable, motor-driven concrete mixer. For small placements less than 0.5 cubic yards, hand mixing in a suitable container may be allowed by Engineer. Concrete shall be Class A.
3. Push the pipe end of the slip base stub into the center of the concrete. Rotate the stub back and forth while pushing it down into the concrete to assure good contact between the concrete and stub. Continue to work the stub into the concrete until it is between 2 to 4 inches above the ground.
4. Plumb the stub. Allow a minimum of 4 days to set, unless otherwise directed by the Engineer.
5. The triangular slipbase system is multidirectional and is designed to release when struck from any direction.

Support

1. Cut support so that the bottom of the sign will be 7 to 7.5 feet above the edge of the travelway (i.e., edge of the closest lane) when slip plate is below the edge of pavement or 7 to 7.5 feet above slip plate when the slip plate is above the edge of the travelway. The cut shall be plumb and straight.
2. Attach sign to support using connections shown. When multiple signs are installed on the same support, ensure the minimum clearance between each sign is maintained. See SMD(SLIP-2) for clearances based on sign types.

CONCRETE ANCHOR

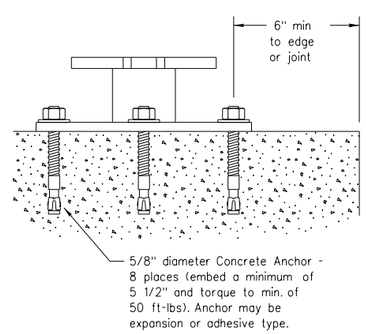

SM RD SGN ASSM TY XXXXX(X)SB(X-XXXX)

Concrete anchor consists of 5/8" diameter stud bolt with UNC series bolt threads on the upper end. Heavy hex nut per ASTM A563, and hardened washer per ASTM F436. The stud bolt shall have a minimum yield and ultimate tensile strength of 50 and 75 KSI, respectively. Nuts, bolts and washers shall be galvanized per Item 445, "Galvanizing." Adhesive type anchors shall have stud bolts installed with Type III epoxy per DMS-6100, "Epoxies and Adhesives." Adhesive anchors may be loaded after adequate epoxy cure time per the manufacturer's recommendations. Top of bolt shall extend at least flush with top of the nut when installed. The anchor, when installed in 4000 psi normal-weight concrete with a 5 1/2" minimum embedment, shall have a minimum allowable tension and shear of 3900 and 3100 psi, respectively.

ISSUE FOR BID

FREESE AND NICHOLS, INC.
TEXAS REGISTERED ENGINEERING FIRM F-2144
STATE OF TEXAS
COURTNEY I CUNNINGHAM
141398
PROFESSIONAL ENGINEER
LICENSED
04-11-2023
FREESE AND NICHOLS
801 Cherry Street, Suite 2800
Fort Worth, TX 76102
Phone - (817) 735-7300
Web - www.freese.com

SABINE RIVER AUTHORITY TOLEDO BEND FISHING TOURNAMENT SITE
ROADWAY AND DRAINAGE ENGINEERING DESIGN
SIGNING AND PAVEMENT MARKINGS DETAILS 03

NO.	ISSUES	BY	DATE

F&N JOB NO. OFF00000
DATE 00/00/00
DESIGNED
DRAWN
REVISED
CHECKED
FILE NAME
SS03

VERIFY SCALE Bar is one inch on original drawing. If not one inch on this Sheet, adjust scale.
0 1

SHEET
SEQ.

MicroStation V8 User: 03952 Office:
pw:\\freese-pw.bentley.com:freese-pw-01\Documents\FNI - Texas\SRA22771 (Transportation)\2 Drawings\2.04 Infrastructure\2.04.02 Sheets\2.04.02.13 Standards\Roadway Standards\SS03
Plotter: c:pmsmt\pltcfg\01Wide-monochrome.pltcfg, Composed: 1/19/2023 - 1:17:46 PM
Plot Scale: 0.2.1099 FT/IN / IN. Models: Default
Date: Apr. 11, 2023 - 02:53:59 PM Project: Freese and Nichols, Inc.

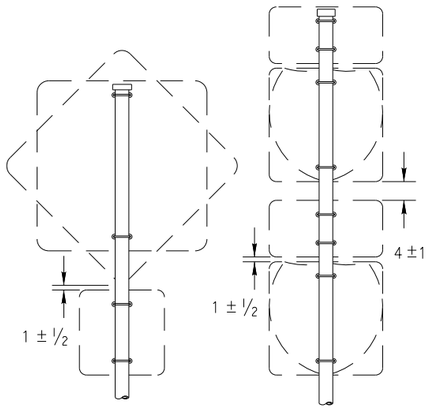

SM RD SGN ASSM TY XXXXX(1)XX(P)

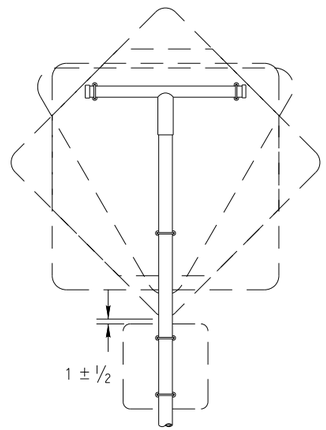

SM RD SGN ASSM TY XXXXX(1)XX(T)

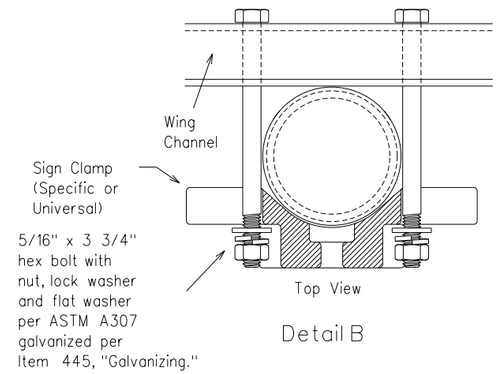

Detail B

FRICTION CAP DETAIL

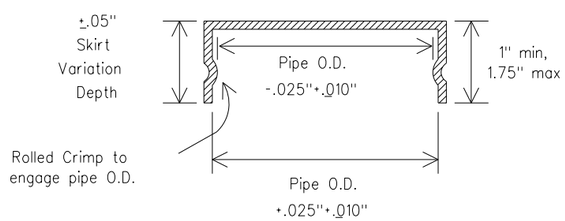

Friction caps may be manufactured from hot rolled or cold rolled steel sheets. The minimum sheet metal thickness shall be 24 gauge for all cap sizes.

The rim edges shall be reasonably straight and smooth. Caps shall be sized and formed in such a manner as to produce a drive-on friction fit and have no tendency to rock when seated on the pipe. The depth shall be sufficient to give positive protection against entrance of rainwater. They shall be free of sharp creases or indentations and show no evidence of metal fracture.

Caps shall have an electrodeposited coating of zinc in accordance with the requirements of ASTM B633 Class FE/ZN 8.

GENERAL NOTES:

1.

SIGN SUPPORT	# OF POSTS	MAX. SIGN AREA
10 BWG	1	16 SF
10 BWG	2	32 SF
Sch 80	1	32 SF
Sch 80	2	64 SF

2. The Engineer may require that a Schedule 80 post be used in place of a 10 BWG where a sign height is abnormally high due to a fill slope.
3. Sign supports shall not be spliced except where shown. Sign support posts shall not be spliced.
4. Aluminum sign blanks shall conform to Departmental Material Specifications DMS-7110 and shall have the following minimum thicknesses: 0.080 for signs less than 7.5 sq. ft., 0.100 for signs 7.5 to 15 sq. ft., and 0.125 for signs greater than 15 sq. ft.
5. Signs that require specific supports due to reasons in addition to windloading are indicated on the "REQUIRED SUPPORT" table on this sheet.
6. For horizontal rectangular signs fabricated from flat aluminum, T-brackets are used for signs 24 inches or less in height. U-brackets are used for signs of greater height.
7. When two triangular slipbase supports are used to support a single sign, they shall not be "rigidly" connected to each other except through the sign panel. This will allow each support to act independently when impacted by an errant vehicle.
8. Wing channel shall meet ASTM A 1011 SS Gr 50 and be galvanized per ASTM A 123.
9. Excess pipe, wing channel, or windbeam shall be cut off so that it does not extend beyond the sign panel (i.e., excess support shall not be visible when the sign is viewed from the front.) Repair galvanized coating at cut support ends per Item 445, "Galvanizing."
10. Additional route markers may be added vertically, provided the total sign area does not exceed the maximum allowable amount per Note 1.
11. Additional sign clamp required on the "T-bracket" post for 24 inch height signs. Place the clamp 3 inches above bottom of sign when possible.
12. Post open ends shall be fitted with Friction Caps.
13. Sign blanks shall be the sizes and shapes shown on the plans.

ISSUE FOR BID

FREESE AND NICHOLS, INC.
TEXAS REGISTERED ENGINEERING FIRM F-2144
STATE OF TEXAS
COURTNEY I CUNNINGHAM
141398
LICENSED PROFESSIONAL ENGINEER
04-11-2023
FREESE AND NICHOLS
801 Cherry Street, Suite 2800
Fort Worth, TX 76102
Phone - (817) 735-7300
Web - www.freese.com

SABINE RIVER AUTHORITY TOLEDO BEND FISHING TOURNAMENT SITE
ROADWAY AND DRAINAGE ENGINEERING DESIGN
SIGNING AND PAVEMENT MARKINGS DETAILS 04

NO.	ISSUES	BY	DATE

F&N JOB NO. OFF00000
DATE 00/00/00
DESIGNED
DRAWN
REVISED
CHECKED
FILE NAME
SS04

VERIFY SCALE Bar is one inch on original drawing. If not one inch on this sheet, adjust scale.
0 1

SHEET
SEQ.

MicroStation V8 User: 03952 Office:
pw:\\freese-pw.bentley.com:freese-pw-01\Documents\FNI - Texas\SRA22771 (Transportation)\2 Drawings\2.04 Infrastructure\2.04.02 Sheets\2.04.02.13 Standards\Roadway Standards\SS04
Plotter: C:\pwworking\pw_freese-pw.bentley.com_freese-pw-01\d0003952\PW_WORK\pw0001.pltcfg
Plot Scale: 0.2143 FT IN / 1 In. Model: Default
Date:Apr. 11, 2023 - 02:54:52 PM Plotted:Freese and Nichols, Inc.

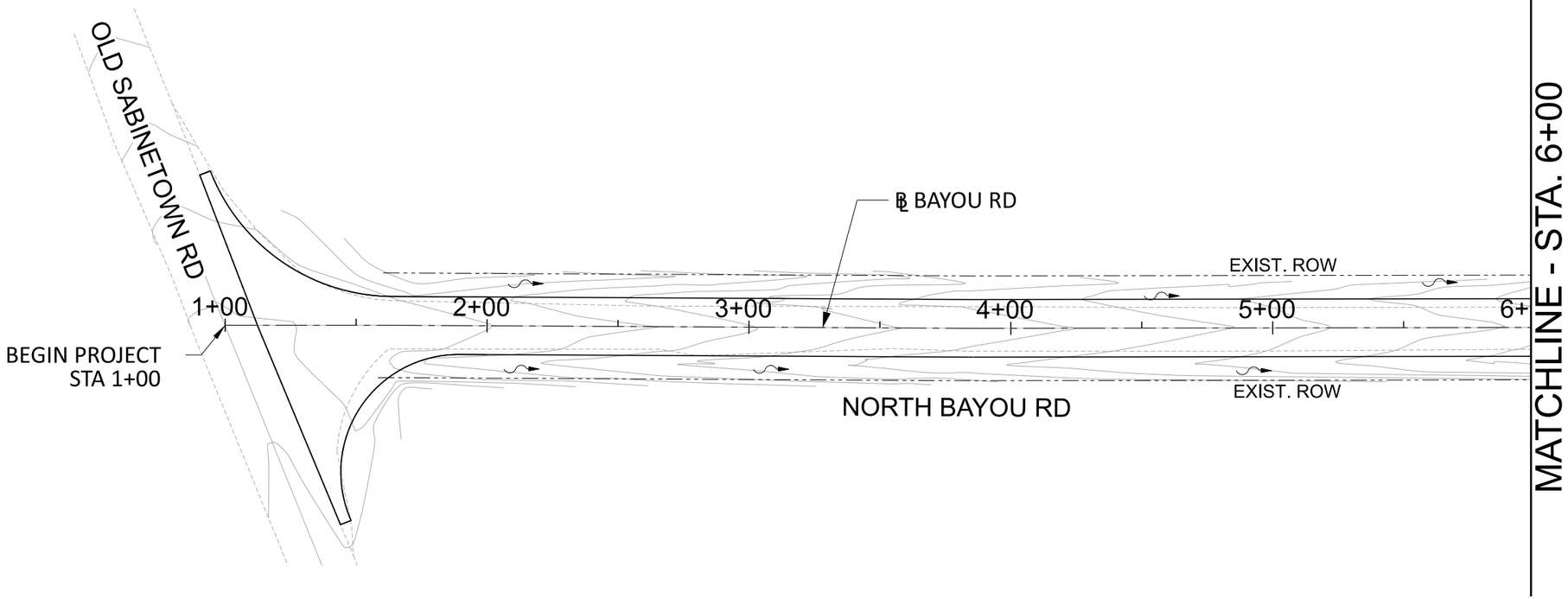

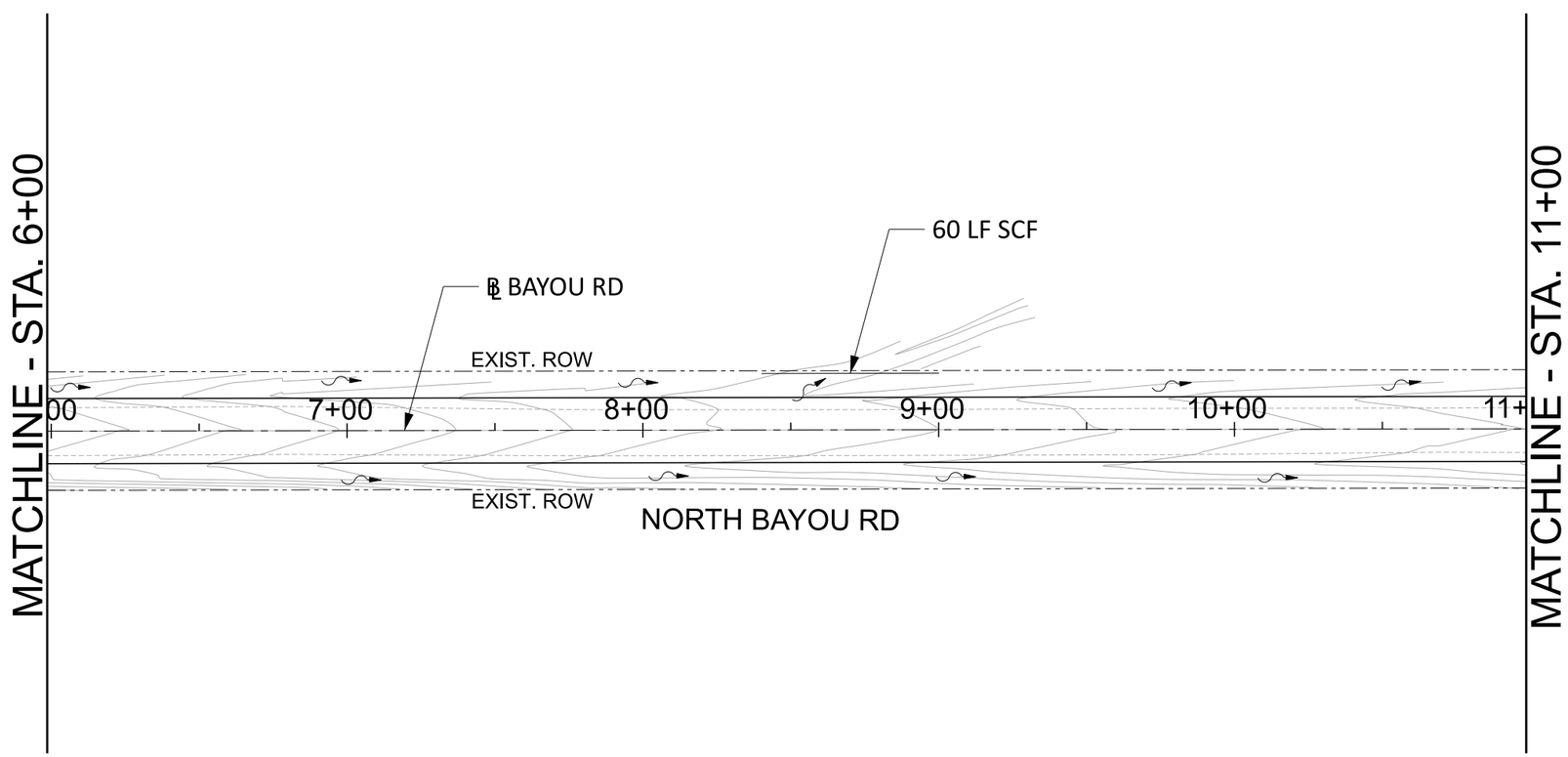

LEGEND

- EXIST. ROW
- SCF — SILT FENCE
- RFD-1 — ROCK FILTER DAM
- FLOW DIRECTION

FREESE AND NICHOLS, INC.
TEXAS REGISTERED ENGINEERING FIRM F-2144

STATE OF TEXAS
COURTNEY I CUNNINGHAM
141398
LICENSED PROFESSIONAL ENGINEER
04-11-2023

FREESE AND NICHOLS
801 Cherry Street, Suite 2800
Fort Worth, TX 76102
Phone - (817) 735-7300
Web - www.freese.com

SABINE RIVER AUTHORITY TOLEDO BEND FISHING TOURNAMENT SITE
ROADWAY AND DRAINAGE ENGINEERING DESIGN

SW3P PLAN
BEGIN PROJECT TO STA 11+00

FAN JOB NO. OFF00000
DATE 00/00/00
DESIGNED
DRAWN
REVISED
CHECKED
FILE NAME SW3P_01.dgn

NO.	ISSUES	BY	DATE

VERIFY SCALE Bar is one inch on original drawing. If not one inch on this sheet, adjust scale.
0 1

SHEET

SEQ.

ISSUE FOR BID

MicroStation V8 User: freesepw11\cl02\ICS
\\freesepw11\cl02\ICS_pdf_work_dir\3814\28171_1\SW3P_01.dgn
Plotter: C:\Program Files\Common Files\Bentley\Plotters\Default.plt
Plot Scale: 50.000 : 1 in. Model: Default
Date: Apr 03, 2023 - 11:03:11 PM Project: Freese and Nichols, Inc.

Office: Date: Apr. 03, 2023 - 11:03:11 PM User: freesepw11\cl02 File: \\freesepw11\cl02\ICS_pdf_work_dir\3814\28171_1\SW3P_01.dgn

MicroStation V8 User: freesepw11lcs02\ICS_pdf_work_dir\3814\28171_2\SW3P_02.dgn
Plotter: C:\Program Files (x86)\Common Files\InterPlot\IPLOT\bin\ipl0drvn.plt
Plot Scale: 50.000 ' / In. Model: Default
Date: Apr. 03, 2023 - 11:02:58 PM Project: Freese and Nichols, Inc.

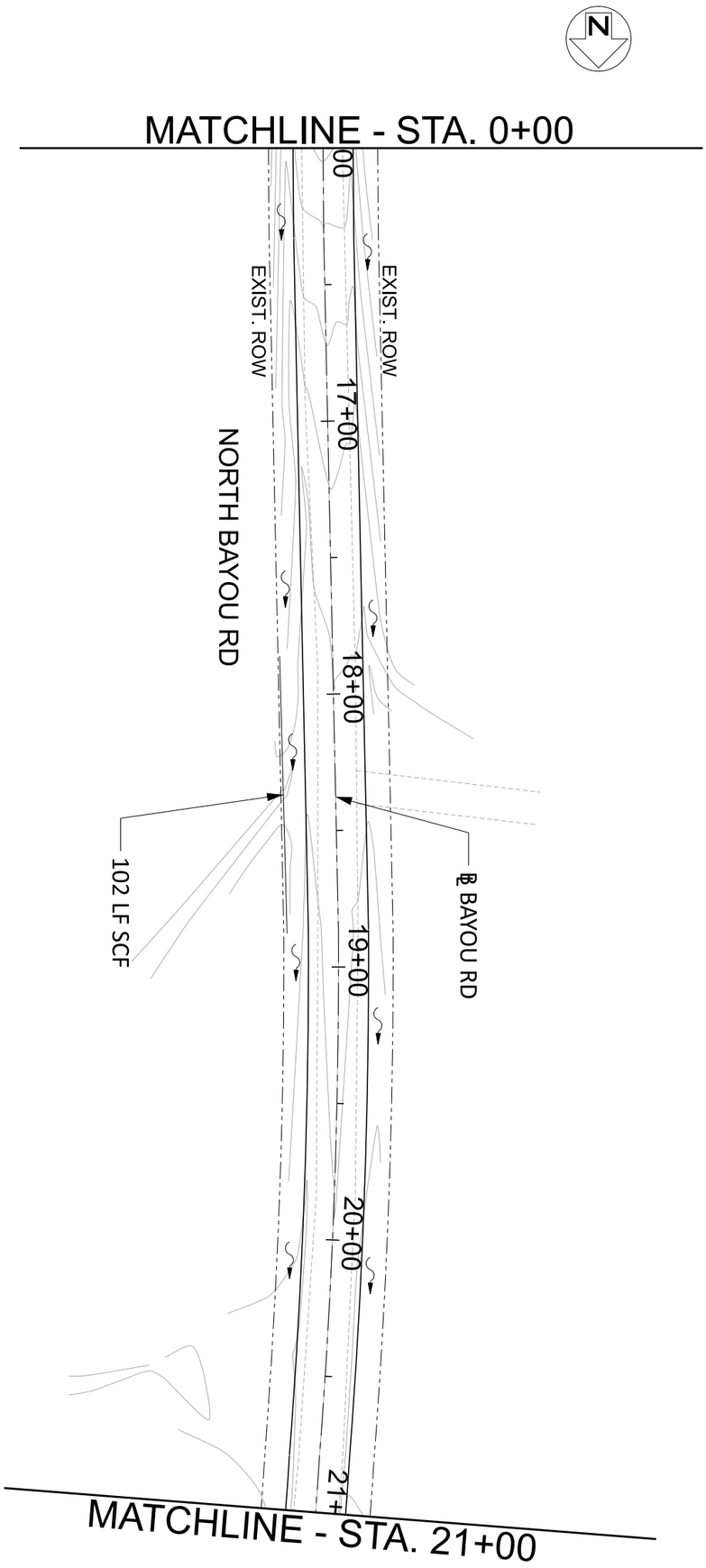

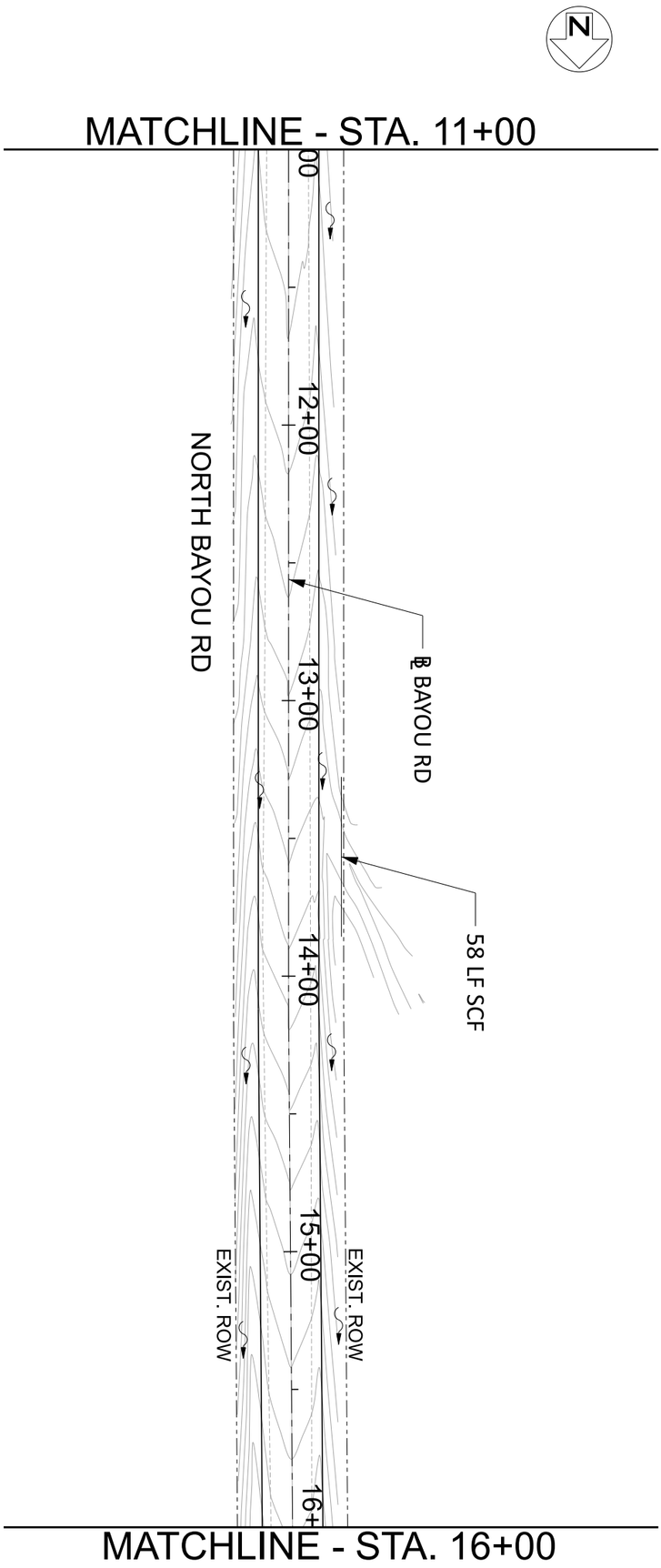

LEGEND

EXIST. ROW

SCF — SILT FENCE

RFD-1 — ROCK FILTER DAM

FLOW DIRECTION

ISSUE FOR BID

NO.	ISSUES	BY	DATE

VERIFY SCALE 0 1 Bar is one inch on original drawing. If not one inch on this sheet, adjust scale.

FILE NAME

F&N JOB NO. OFF00000
DATE 00/00/00
DESIGNED
DRAWN
REVISED
CHECKED
SW3P_02.dgn

SABINE RIVER AUTHORITY TOLEDO BEND FISHING TOURNAMENT SITE

ROADWAY AND DRAINAGE ENGINEERING DESIGN

SW3P PLAN
STA 11+00 TO STA 21+00

FREESE AND NICHOLS
801 Cherry Street, Suite 2800
Fort Worth, TX 76102
Phone - (817) 735-7300
Web - www.freese.com

FREESE AND NICHOLS, INC.
TEXAS REGISTERED ENGINEERING FIRM F-2144

STATE OF TEXAS
COURTNEY I CUNNINGHAM
141398
LICENSED
PROFESSIONAL ENGINEER

04-11-2023

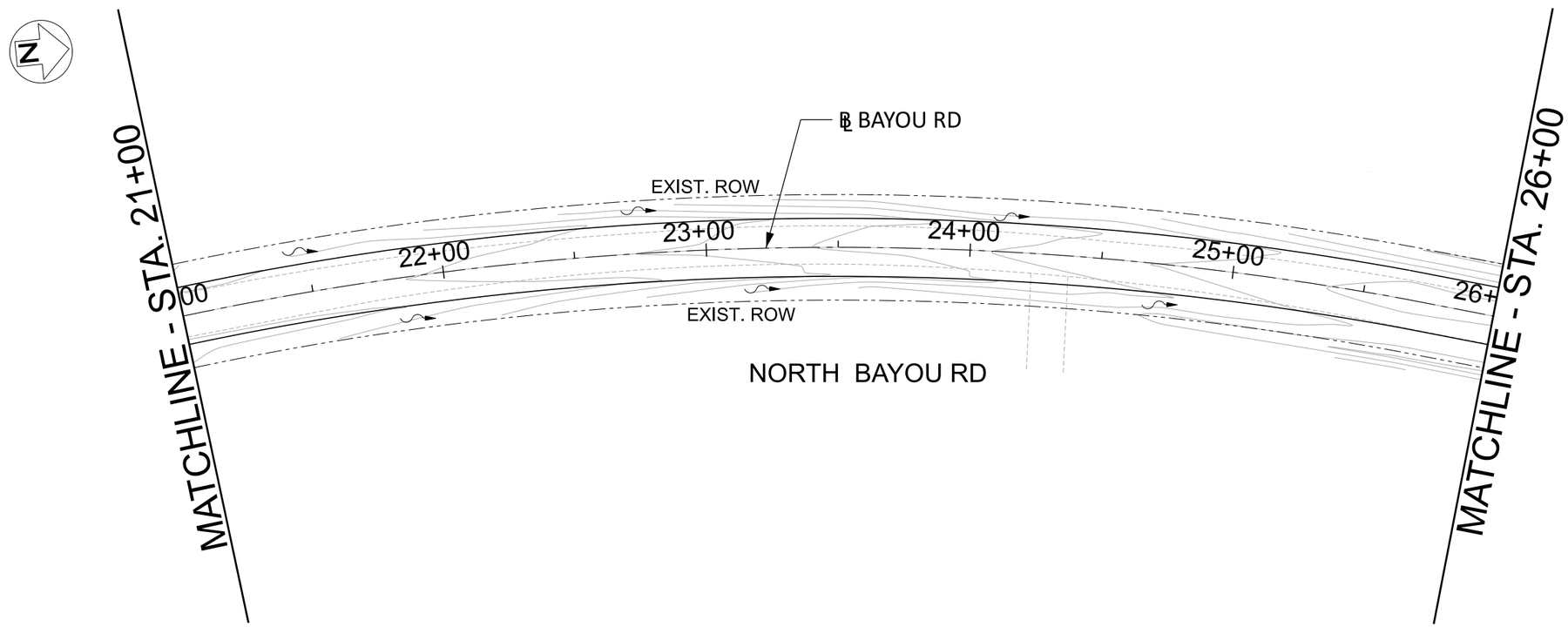

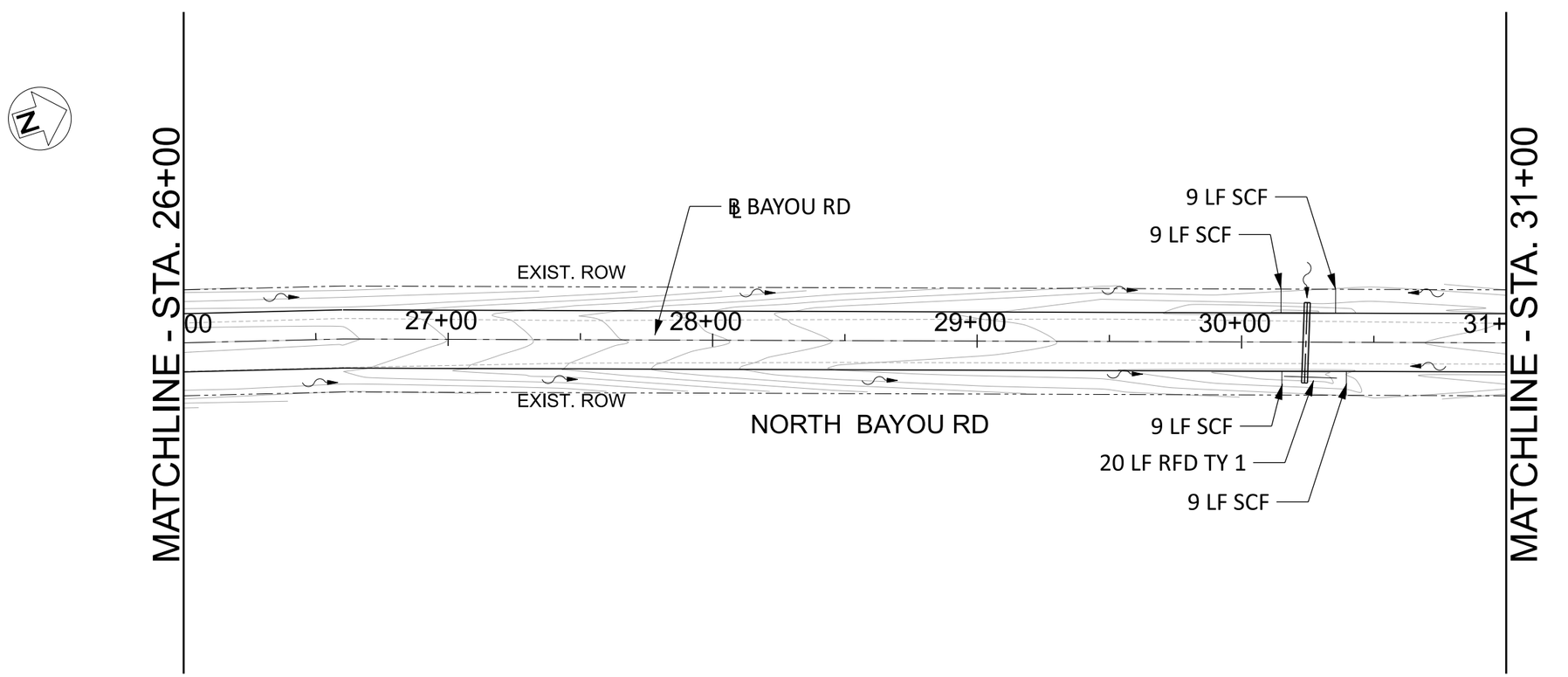

LEGEND

- EXIST. ROW
- SCF — SILT FENCE
- RFD-1 — ROCK FILTER DAM
- FLOW DIRECTION

FREESE AND NICHOLS, INC.
TEXAS REGISTERED ENGINEERING FIRM F-2144

STATE OF TEXAS
COURTNEY I CUNNINGHAM
141398
LICENSED PROFESSIONAL ENGINEER
04-11-2023

FREESE AND NICHOLS
801 Cherry Street, Suite 2800
Fort Worth, TX 76102
Phone - (817) 735-7300
Web - www.freese.com

SABINE RIVER AUTHORITY TOLEDO BEND FISHING TOURNAMENT SITE

ROADWAY AND DRAINAGE ENGINEERING DESIGN

SW3P PLAN
STA 21+00 TO STA STA 31+00

NO.	ISSUES	BY	DATE

F&N JOB NO. OFF00000
DATE 00/00/00
DESIGNED
DRAWN
REVISED
CHECKED
FILE NAME SW3P_03.dgn

VERIFY SCALE Bar is one inch on original drawing. If not one inch on this sheet, adjust scale. 0 1

SHEET

SEQ.

ISSUE FOR BID

MicroStation V8 User: freesepw11\cs02
Plotter: C:\Users\freesepw11\cs02\ICS_pdf_work_dir\3814\28171_3\SW3P_03.dgn
Plot Scale: 50.000 : 1 in.
Date: Apr. 03, 2023 - 11:02:39 PM
Model: Default
Project: Freese and Nichols, Inc.

Office: Date: Apr. 03, 2023 - 11:02:39 PM User: freesepw11\cs02 File: C:\Users\freesepw11\cs02\ICS_pdf_work_dir\3814\28171_3\SW3P_03.dgn

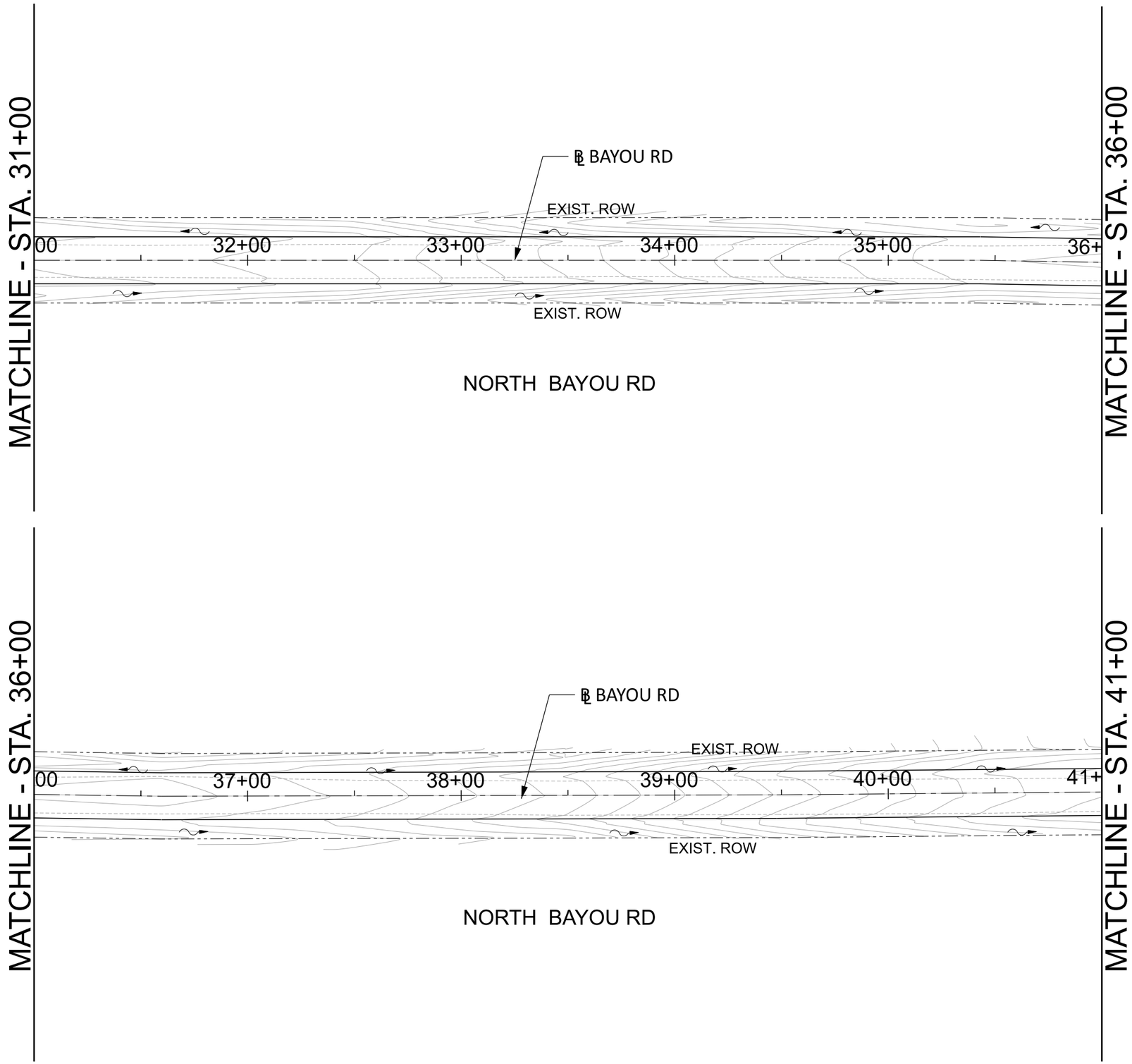

LEGEND

- EXIST. ROW
- SCF — SILT FENCE
- RFD-1 — ROCK FILTER DAM
- FLOW DIRECTION

FREESE AND NICHOLS, INC.
TEXAS REGISTERED ENGINEERING FIRM F-2144

STATE OF TEXAS
COURTNEY I CUNNINGHAM
141398
LICENSED
PROFESSIONAL ENGINEER
04-11-2023

FREESE AND NICHOLS
801 Cherry Street, Suite 2800
Fort Worth, TX 76102
Phone - (817) 735-7300
Web - www.freese.com

SABINE RIVER AUTHORITY TOLEDO BEND FISHING TOURNAMENT SITE
ROADWAY AND DRAINAGE ENGINEERING DESIGN

SW3P PLAN
STA 31+00 TO STA 41+00

F&N JOB NO.	OFF00000
DATE	00/00/00
DESIGNED	
DRAWN	
REVISED	
CHECKED	
FILE NAME	SW3P_04.dgn

NO.	ISSUES	BY	DATE

VERIFY SCALE
0 1
Bar is one inch on original drawing.
If not one inch on this sheet, adjust scale.

SHEET

SEQ.

ISSUE FOR BID

MicroStation V8 User: freesepw11lcs02\ICS_pdf_work_dir\3814\28171_4\SW3P_04.dgn
Plotter: C:\Program Files (x86)\Common Files\InterPlot\IPLOT\Drivers\pltdrvn.plt
Plot Scale: 50.000 / in. Model: Default
Date: Apr. 03, 2023 - 11:01:37 PM Project: Freese and Nichols, Inc.

Office: Date: Apr. 03, 2023 - 11:01:37 PM User: freesepw11lcs02\ICS_pdf_work_dir\3814\28171_4\SW3P_04.dgn

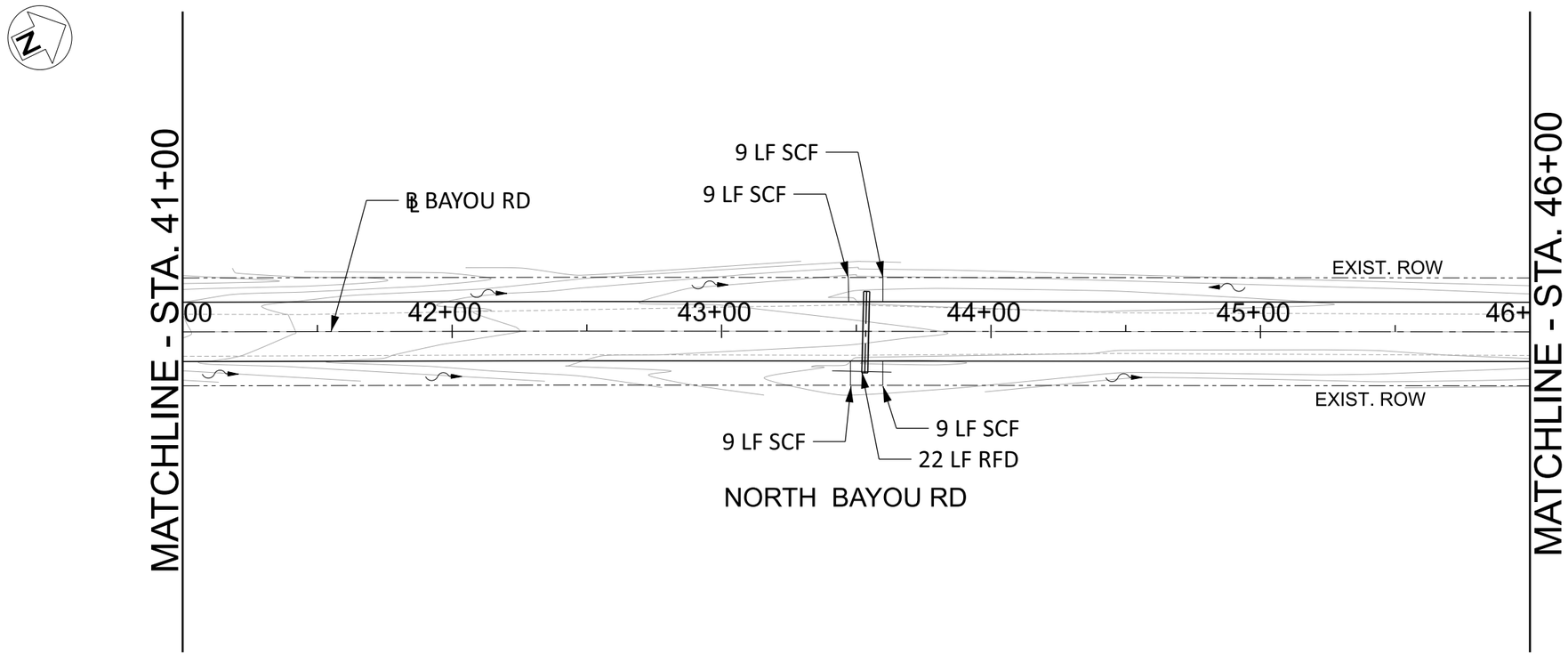

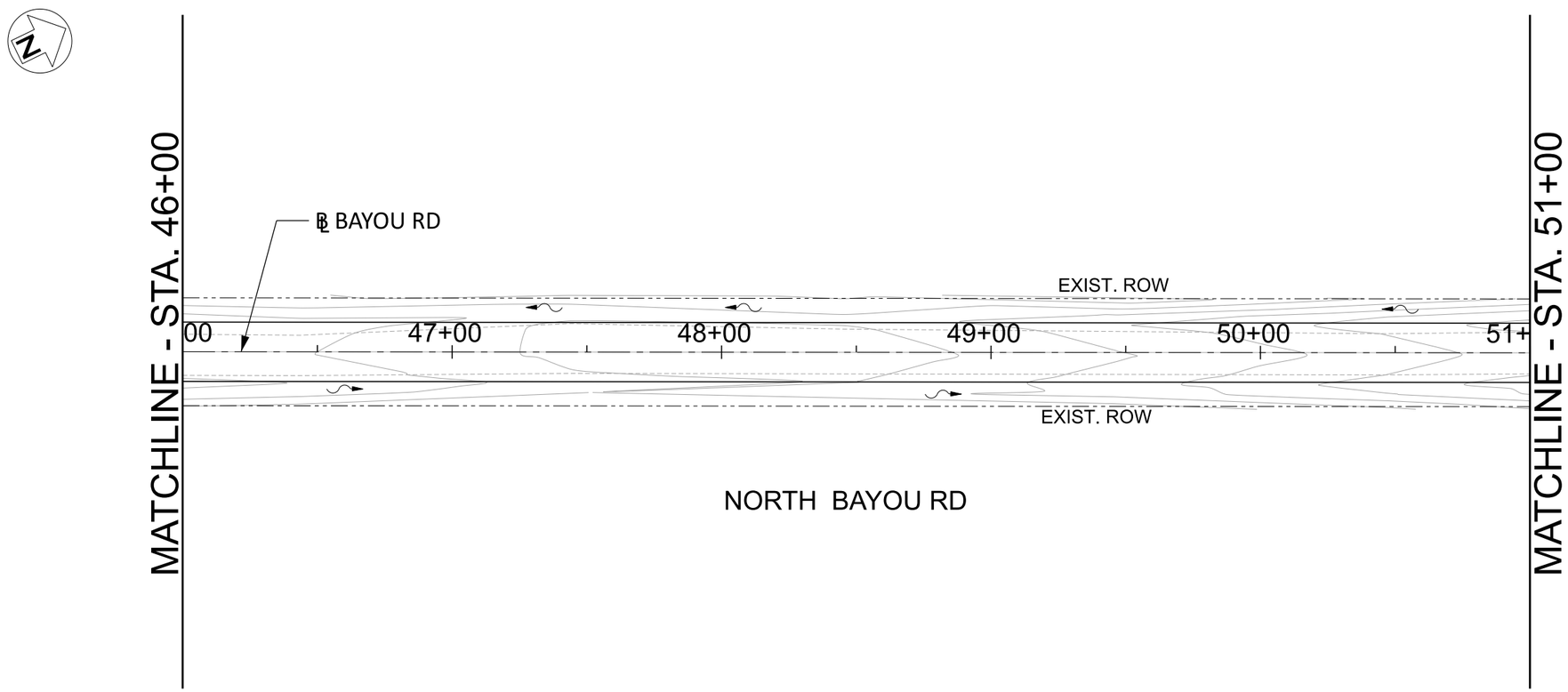

LEGEND

- EXIST. ROW
- SCF — SILT FENCE
- RFD-1 — ROCK FILTER DAM
- FLOW DIRECTION

FREESE AND NICHOLS, INC.
TEXAS REGISTERED ENGINEERING FIRM F-2144

STATE OF TEXAS
COURTNEY I CUNNINGHAM
141398
LICENSED PROFESSIONAL ENGINEER
04-11-2023

FREESE AND NICHOLS
801 Cherry Street, Suite 2800
Fort Worth, TX 76102
Phone - (817) 735-7300
Web - www.freese.com

SABINE RIVER AUTHORITY TOLEDO BEND FISHING TOURNAMENT SITE
ROADWAY AND DRAINAGE ENGINEERING DESIGN

SW3P PLAN
STA 41+00 TO STA 51+00

NO.	ISSUES	BY	DATE

F&N JOB NO. OFF00000
DATE 00/00/00
DESIGNED
DRAWN
REVISED
CHECKED
FILE NAME SW3P_05.dgn

VERIFY SCALE Bar is one inch on original drawing. If not one inch on this sheet, adjust scale.
0 1

SHEET
SEQ.

ISSUE FOR BID

MicroStation V8 User: freesepw11\Office:
Platter: C:\Program Files\Bentley\Connect Edition\Platters\Default.plt
Plot Scale: 50.000 : 1 in.
Date: Apr. 03, 2023 - 11:03:26 PM
Model: Default
Project: Freese and Nichols, Inc.

Office: Date: Apr. 03, 2023 - 11:03:26 PM User: freesepw11 File: I:\freesepw11\cs02\ICS_pdf_work_dir\3814\28171_5\SW3P_05.dgn

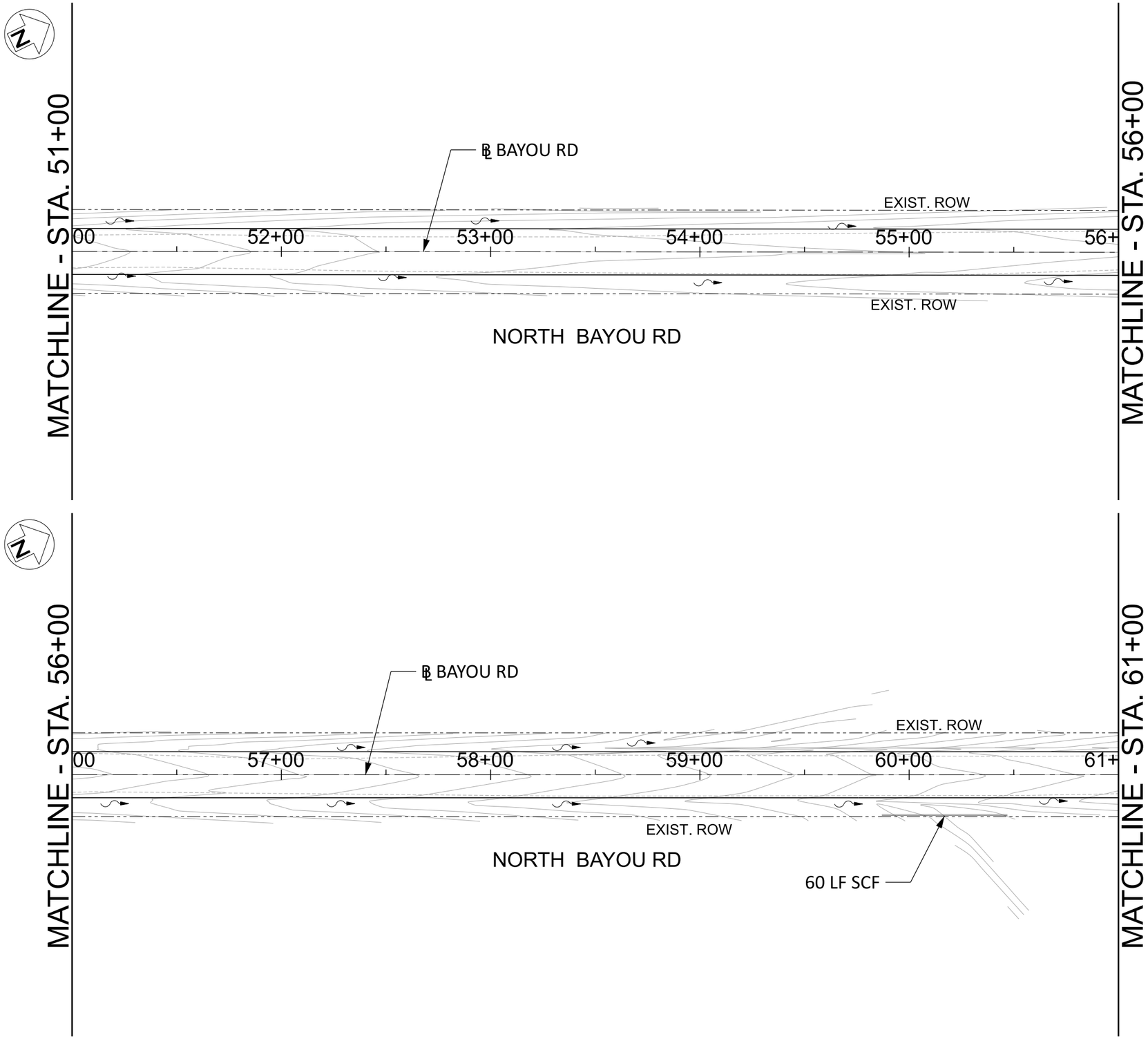

LEGEND

- EXIST. ROW
- SCF — SILT FENCE
- RFD-1 — ROCK FILTER DAM
- FLOW DIRECTION

FREESE AND NICHOLS, INC.
TEXAS REGISTERED ENGINEERING FIRM F-2144

STATE OF TEXAS
COURTNEY I CUNNINGHAM
141398
LICENSED
PROFESSIONAL ENGINEER
04-11-2023

FREESE AND NICHOLS
801 Cherry Street, Suite 2800
Fort Worth, TX 76102
Phone - (817) 735-7300
Web - www.freese.com

SABINE RIVER AUTHORITY TOLEDO BEND FISHING TOURNAMENT SITE
ROADWAY AND DRAINAGE ENGINEERING DESIGN

SW3P PLAN
STA 51+00 TO STA 61+00

NO.	ISSUES	BY	DATE

F&N JOB NO. OFF00000
DATE 00/00/00
DESIGNED
DRAWN
REVISED
CHECKED
FILE NAME SW3P_06.dgn

VERIFY SCALE
0 1
Bar is one inch on original drawing.
If not one inch on this sheet, adjust scale.

SHEET
SEQ.

ISSUE FOR BID

MicroStation V8 User: freesepw11\lcs02\ICS_pdf_work_dir\3814\28171_6\SW3P_06.dgn
Plotter: C:\Program Files (x86)\Common Files\InterPlot\Plot Drivers\pltdrvn.plt
Plot Scale: 50.000 ' / in.
Date: Apr. 03, 2023 - 11:03:25 PM
Model: Default
Project: Freese and Nichols, Inc.

Office: Date: Apr. 03, 2023 - 11:03:25 PM User: freesepw11\lcs02\ICS_pdf_work_dir\3814\28171_6\SW3P_06.dgn

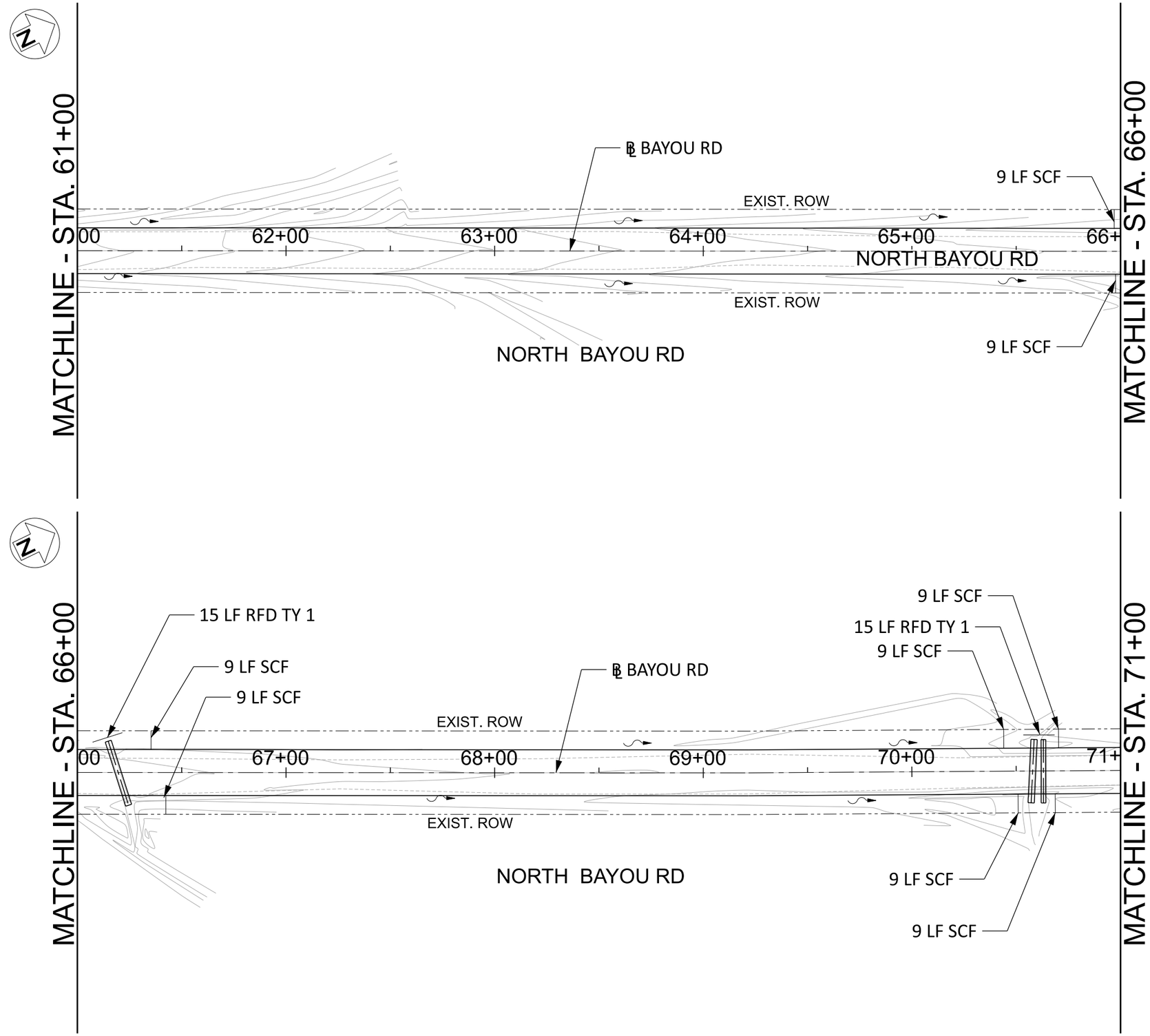

LEGEND

- EXIST. ROW
- SCF — SILT FENCE
- RFD-1 — ROCK FILTER DAM
- FLOW DIRECTION

FREESE AND NICHOLS, INC.
TEXAS REGISTERED ENGINEERING FIRM F-2144

STATE OF TEXAS
COURTNEY I CUNNINGHAM
141398
LICENSED PROFESSIONAL ENGINEER
04-11-2023

FREESE AND NICHOLS
801 Cherry Street, Suite 2800
Fort Worth, TX 76102
Phone - (817) 735-7300
Web - www.freese.com

SABINE RIVER AUTHORITY TOLEDO BEND FISHING TOURNAMENT SITE
ROADWAY AND DRAINAGE ENGINEERING DESIGN

SW3P PLAN
STA 61+00 TO STA 71+00

NO.	ISSUES	BY	DATE

F&N JOB NO. OFF00000
DATE 00/00/00
DESIGNED
DRAWN
REVISED
CHECKED
FILE NAME SW3P_07.dgn

VERIFY SCALE
0 1
Bar is one inch on original drawing.
If not one inch on this sheet, adjust scale.

SHEET
SEQ.

ISSUE FOR BID

MicroStation V8 User: freesepw11lcs02\ICS_pdf_work_dir\3814\28171_7\SW3P_07.dgn
Plotter: C:\Program Files (x86)\Common Files\InterPlot\Plot Drivers\pltdrvn.plt
Plot Scale: 50.000 / in.
Date: Apr. 03, 2023 - 11:02:56 PM
Model: Default
Project: Freese and Nichols, Inc.

Office: Date: Apr. 03, 2023 - 11:02:56 PM User: freesepw11lcs02\ICS_pdf_work_dir\3814\28171_7\SW3P_07.dgn

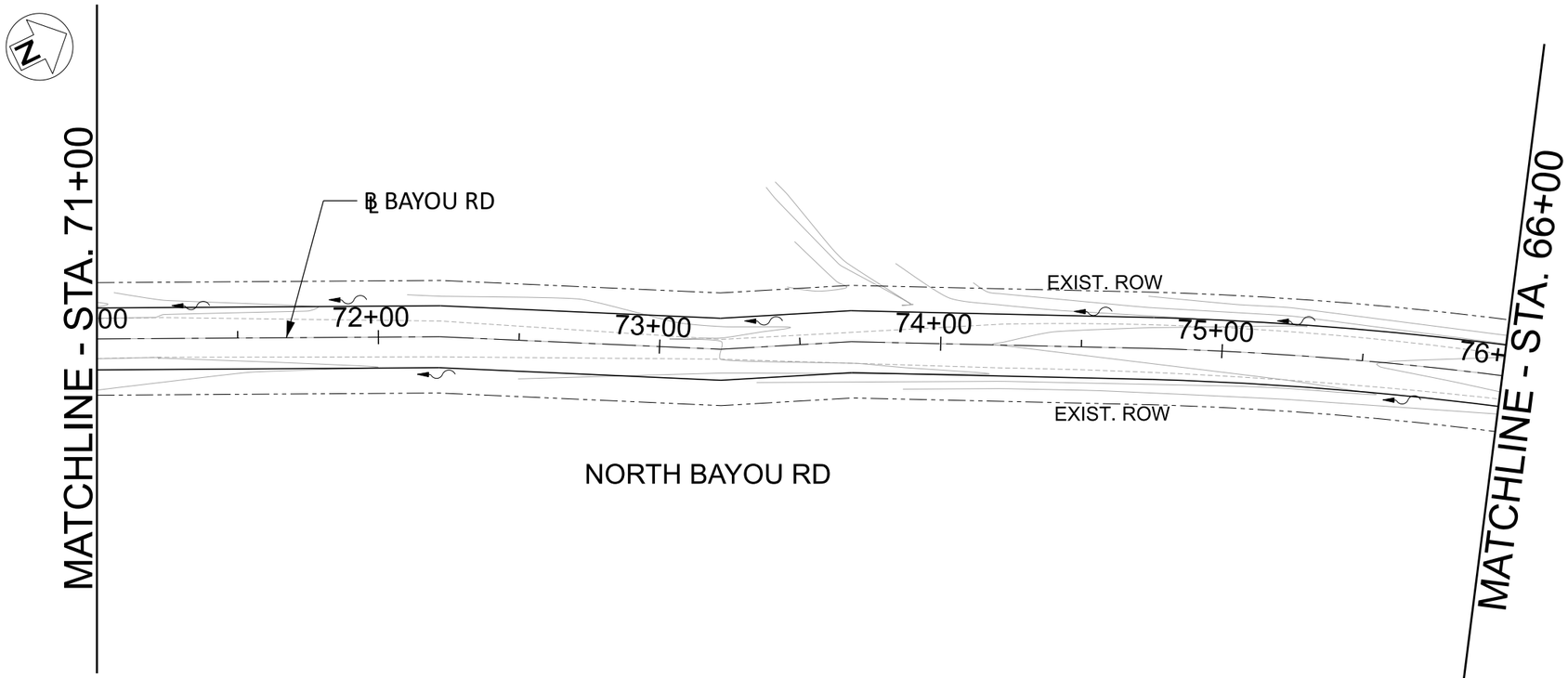

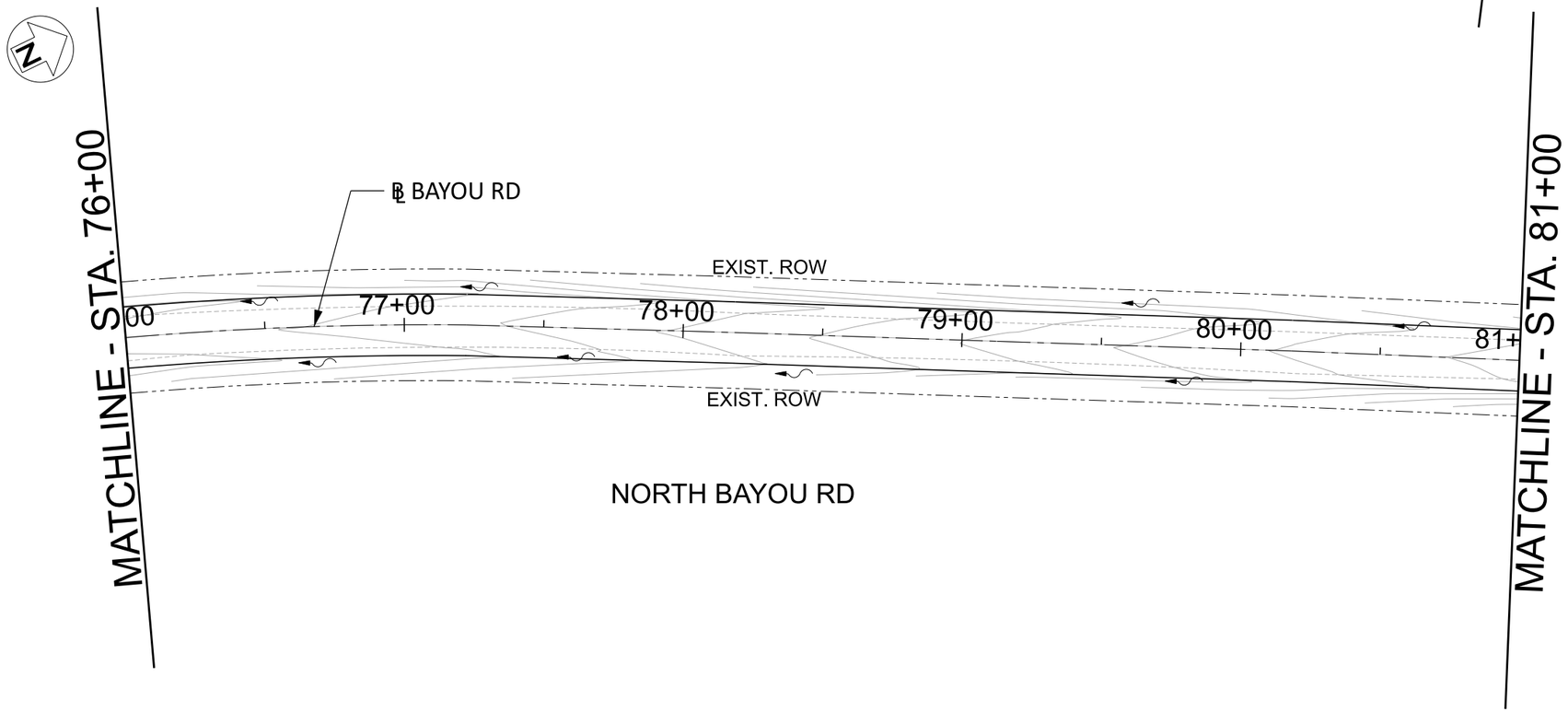

LEGEND

- EXIST. ROW
- SCF — SILT FENCE
- RFD-1 — ROCK FILTER DAM
- FLOW DIRECTION

FREESE AND NICHOLS, INC.
TEXAS REGISTERED ENGINEERING FIRM F-2144

STATE OF TEXAS
COURTNEY I CUNNINGHAM
141398
LICENSED PROFESSIONAL ENGINEER
04-11-2023

FREESE AND NICHOLS
801 Cherry Street, Suite 2800
Fort Worth, TX 76102
Phone - (817) 735-7300
Web - www.freese.com

SABINE RIVER AUTHORITY TOLEDO BEND FISHING TOURNAMENT SITE

ROADWAY AND DRAINAGE ENGINEERING DESIGN

SW3P PLAN
STA 71+00 TO STA 81+00

NO.	ISSUES	BY	DATE

F&N JOB NO. OFF00000
DATE 00/00/00
DESIGNED
DRAWN
REVISED
CHECKED
FILE NAME SW3P_08.dgn

VERIFY SCALE Bar is one inch on original drawing.
0 1 If not one inch on this sheet, adjust scale.

SHEET

SEQ.

ISSUE FOR BID

MicroStation V8 User: freesepw11
Office: I:\freesepw11\ics02\ICS_pdf_work_dir\3814\28171_8\SW3P_08.dgn
Plotter: C:\Program Files\Bentley\Common\Plotters\Generic.pltr
Plot Scale: 50.000 : 1 in.
Date: Apr. 03, 2023 - 11:01:57 PM
Model: Default
Project: Freese and Nichols, Inc.

Office: Date: Apr. 03, 2023 - 11:01:57 PM User: freesepw11 File: I:\freesepw11\ics02\ICS_pdf_work_dir\3814\28171_8\SW3P_08.dgn

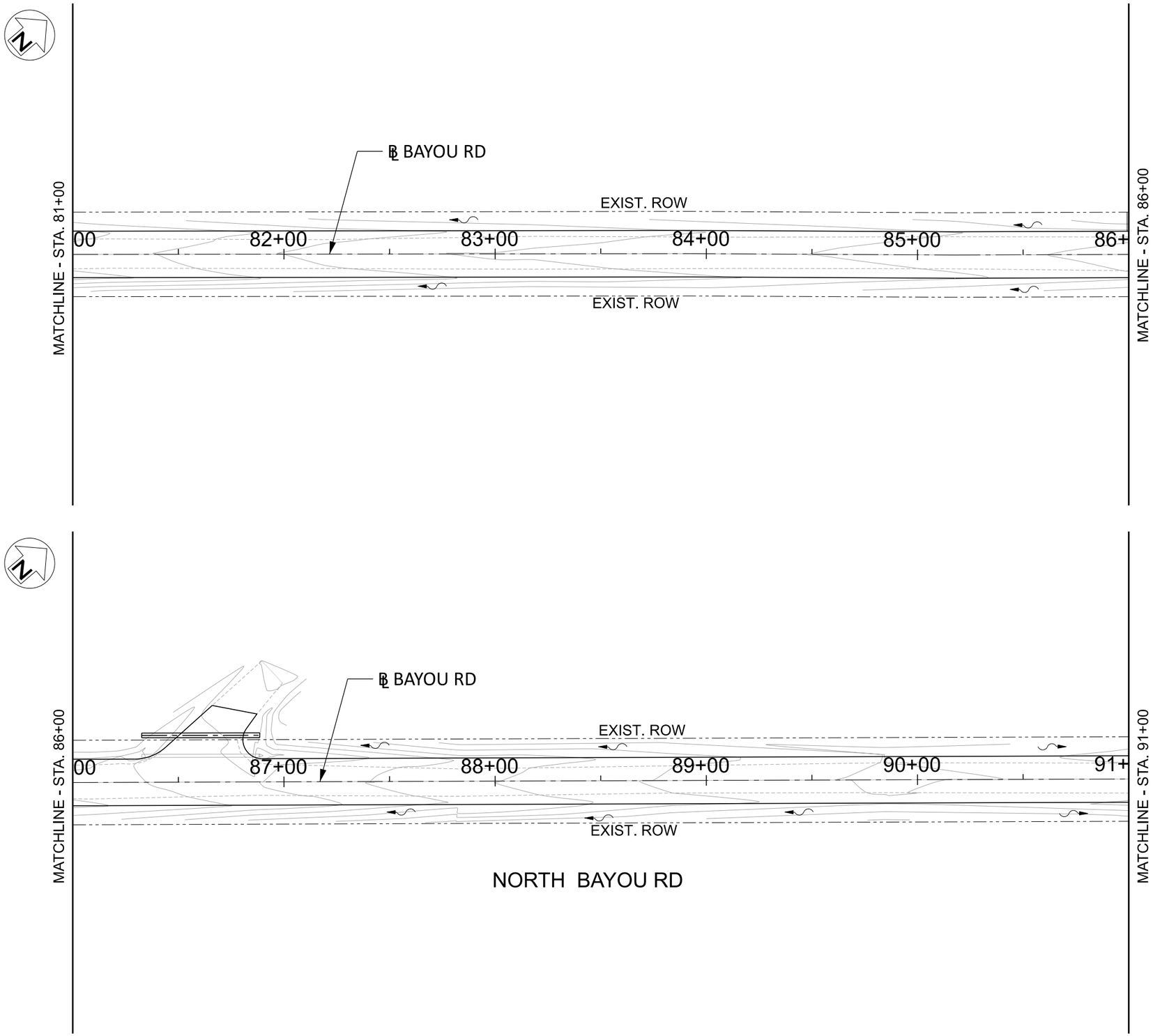

LEGEND

- EXIST. ROW
- SCF — SILT FENCE
- RFD-1 — ROCK FILTER DAM
- FLOW DIRECTION

FREESE AND NICHOLS, INC.
TEXAS REGISTERED ENGINEERING FIRM F-2144

STATE OF TEXAS
COURTNEY I CUNNINGHAM
141398
LICENSED PROFESSIONAL ENGINEER
04-11-2023

FREESE AND NICHOLS
801 Cherry Street, Suite 2800
Fort Worth, TX 76102
Phone - (817) 735-7300
Web - www.freese.com

SABINE RIVER AUTHORITY TOLEDO BEND FISHING TOURNAMENT SITE
ROADWAY AND DRAINAGE ENGINEERING DESIGN

SW3P PLAN
STA 81+00 TO STA 91+00

NO.	ISSUES	BY	DATE

F&N JOB NO. OFF00000
DATE 00/00/00
DESIGNED
DRAWN
REVISED
CHECKED
FILE NAME SW3P_09.dgn

VERIFY SCALE
0 1
Bar is one inch on original drawing.
If not one inch on this sheet, adjust scale.

SHEET
SEQ.

ISSUE FOR BID

MicroStation V8 User: freesepw11cs02\ICS_pdf_work_dir\3814\28171_9\SW3P_09.dgn
Plotter: C:\Program Files (x86)\Common Files\InterPlot\Plot\bin\ip6dvn.plt
Plot Scale: 50.000 / in.
Date: Apr. 03, 2023 - 11:04:17 PM
Model: Default
Project: Freese and Nichols, Inc.

Office:
Date: Apr. 03, 2023 - 11:04:17 PM
User: freesepw11cs02\ICS_pdf_work_dir\3814\28171_9\SW3P_09.dgn

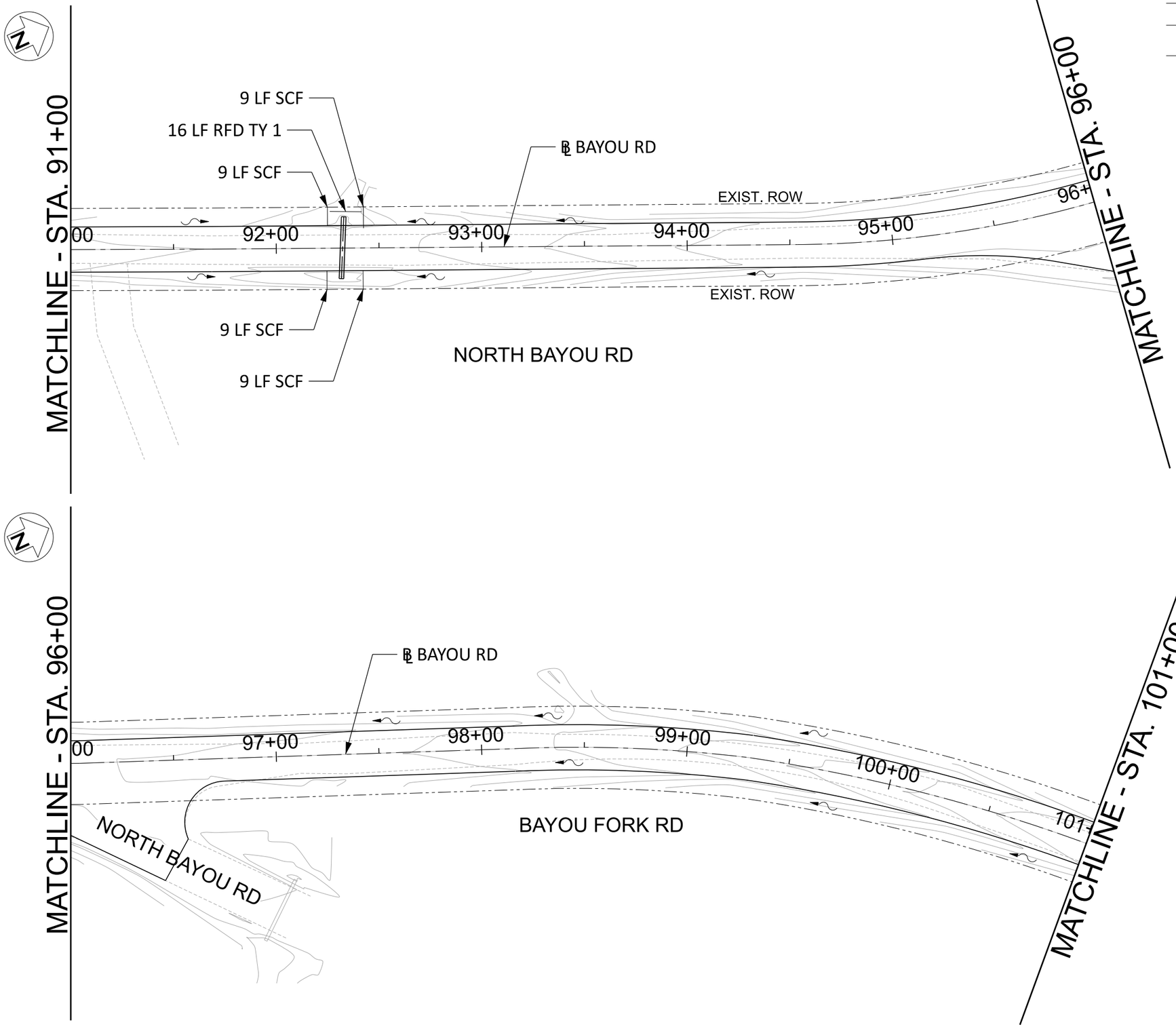

LEGEND

- EXIST. ROW
- SCF — SILT FENCE
- RFD-1 — ROCK FILTER DAM
- FLOW DIRECTION

ISSUE FOR BID

FREESE AND NICHOLS, INC.
TEXAS REGISTERED ENGINEERING FIRM F-2144

STATE OF TEXAS
COURTNEY I CUNNINGHAM
141398
LICENSED PROFESSIONAL ENGINEER
04-11-2023

FREESE AND NICHOLS
801 Cherry Street, Suite 2800
Fort Worth, TX 76102
Phone - (817) 735-7300
Web - www.freese.com

SABINE RIVER AUTHORITY TOLEDO BEND FISHING TOURNAMENT SITE
ROADWAY AND DRAINAGE ENGINEERING DESIGN

SW3P PLAN
STA 91+00 TO STA 101+00

NO.	ISSUES	BY	DATE

FAN JOB NO. OFF00000
DATE 00/00/00
DESIGNED
DRAWN
REVISED
CHECKED
FILE NAME SW3P_10.dgn

VERIFY SCALE Bar is one inch on original drawing. If not one inch on this sheet, adjust scale.
0 1

SHEET
SEQ.

MicroStation V8 User: freesepw11\lcs02
File: \\freesepw11\lcs02\ICS_pdf_work_dir\3814\28171_10\SW3P_10.dgn
Plotter: C:\Bentley\Plotters\Common\Bentley Plot Driver.pltr
Plot Scale: 50.000 : 1 in.
Date: Apr 03, 2023 - 11:04:06 PM
Model: Default
Project: Freese and Nichols, Inc.

Office: Date: Apr. 03, 2023 - 11:04:06 PM User: freesepw11\lcs02 File: \\freesepw11\lcs02\ICS_pdf_work_dir\3814\28171_10\SW3P_10.dgn

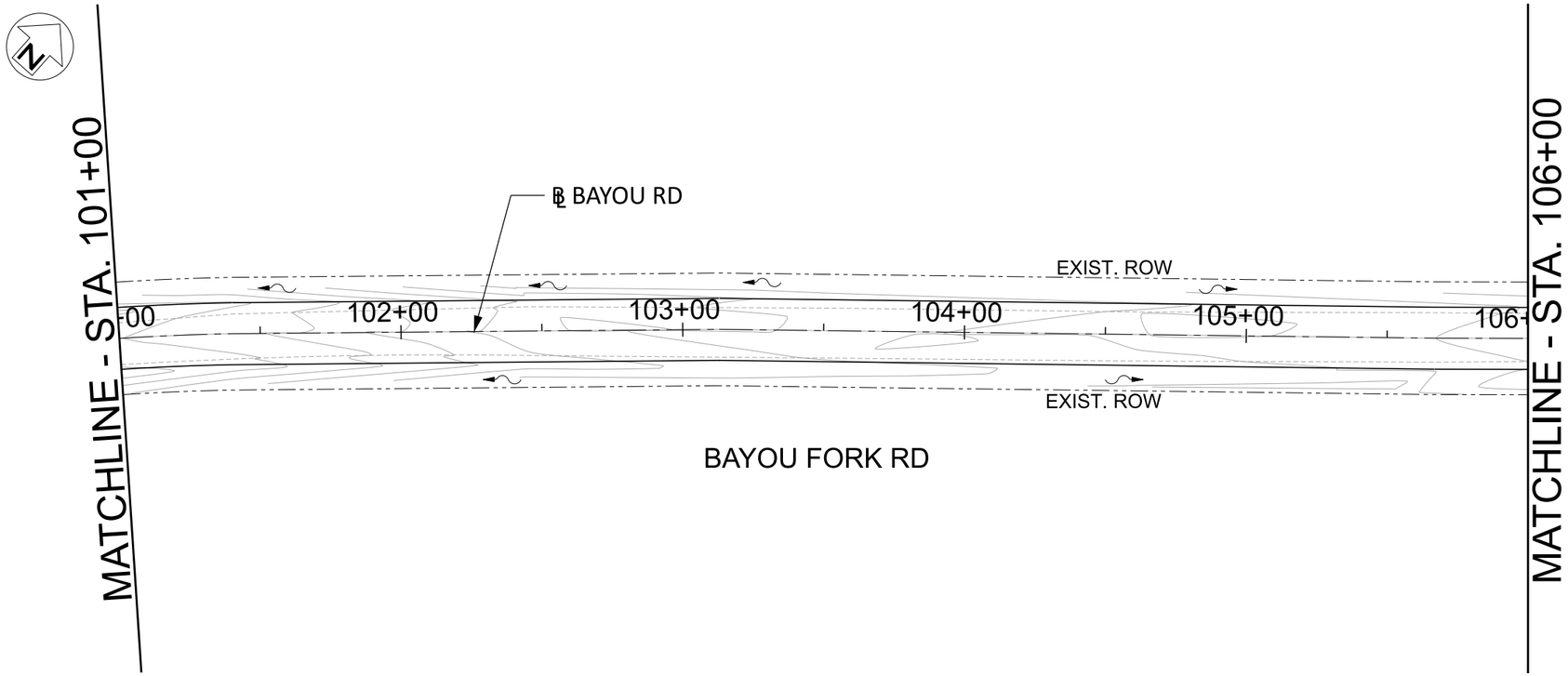

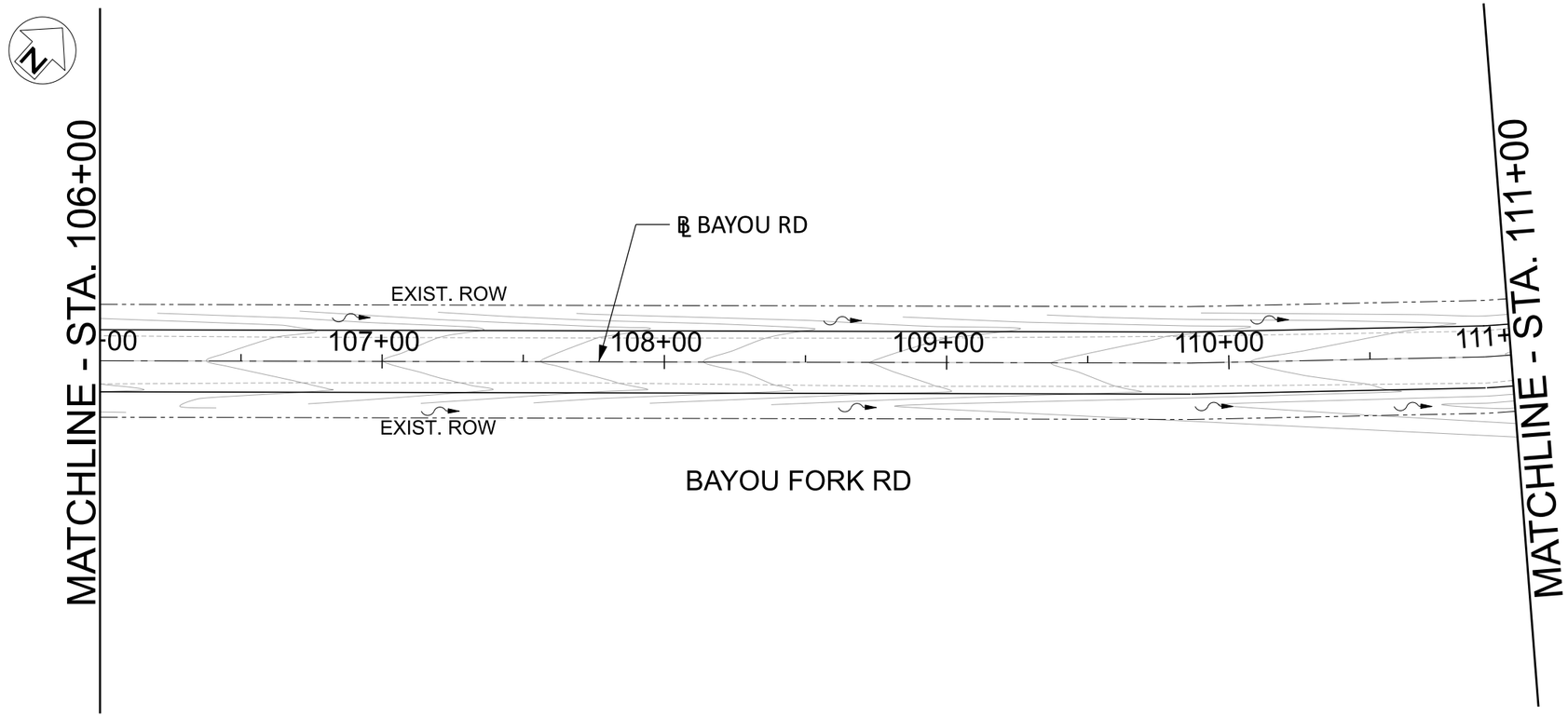

LEGEND

- EXIST. ROW
- SCF — SILT FENCE
- RFD-1 — ROCK FILTER DAM
- FLOW DIRECTION

FREESE AND NICHOLS, INC.
TEXAS REGISTERED ENGINEERING FIRM F-2144

STATE OF TEXAS
COURTNEY I CUNNINGHAM
141398
LICENSED
PROFESSIONAL ENGINEER
04-11-2023

FREESE AND NICHOLS
801 Cherry Street, Suite 2800
Fort Worth, TX 76102
Phone - (817) 735-7300
Web - www.freese.com

SABINE RIVER AUTHORITY TOLEDO BEND FISHING TOURNAMENT SITE
ROADWAY AND DRAINAGE ENGINEERING DESIGN

SW3P PLAN
STA 101+00 TO STA 111+00

NO.	ISSUES	BY	DATE

F&N JOB NO. OFF00000
DATE 00/00/00
DESIGNED
DRAWN
REVISED
CHECKED
FILE NAME SW3P_11.dgn

VERIFY SCALE
0 1
Bar is one inch on original drawing.
If not one inch on this sheet, adjust scale.

SHEET
SEQ.

ISSUE FOR BID

MicroStation V8 User: freesepw11lcs02
Plotter: C:\Program Files (x86)\Common Files\Interplot\IPLOT\bin\tabloid\bin\tabloid.pdf
Plot Scale: 50.000 ' / in.
Date: Apr. 03, 2023 - 11:03:53 PM
Model: Default
Project: Freese and Nichols, Inc.

Office: Date: Apr. 03, 2023 - 11:03:53 PM User: freesepw11lcs02 File: freesepw11lcs02\ICS_pdf_work_dir\3814\28171_11\SW3P_11.dgn

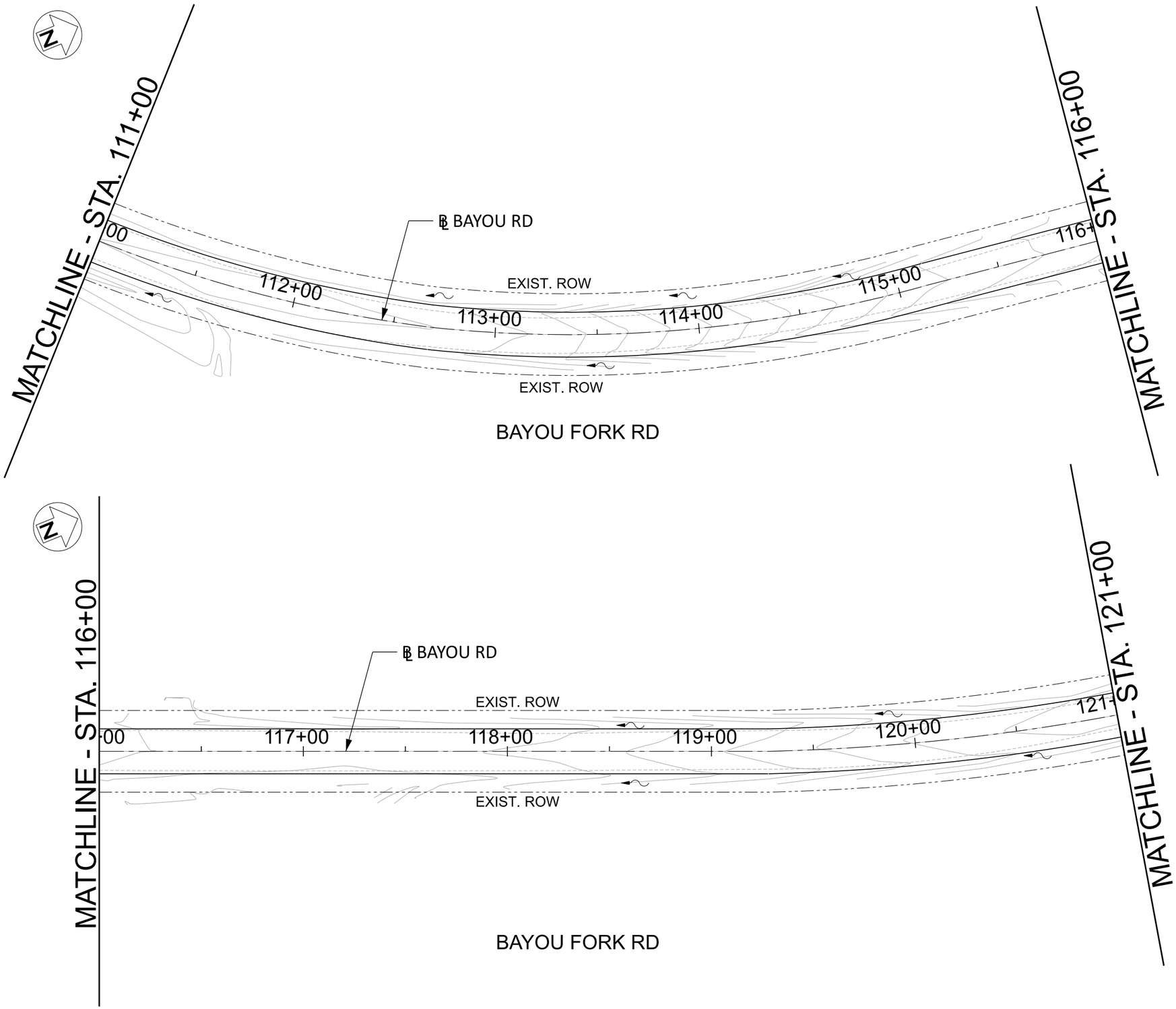

LEGEND

- EXIST. ROW
- SCF — SILT FENCE
- RFD-1 — ROCK FILTER DAM
- FLOW DIRECTION

FREESE AND NICHOLS, INC.
TEXAS REGISTERED ENGINEERING FIRM F-2144

STATE OF TEXAS
COURTNEY I CUNNINGHAM
141398
LICENSED
PROFESSIONAL ENGINEER
04-11-2023

FREESE AND NICHOLS
801 Cherry Street, Suite 2800
Fort Worth, TX 76102
Phone - (817) 735-7300
Web - www.freese.com

SABINE RIVER AUTHORITY TOLEDO BEND FISHING TOURNAMENT SITE
ROADWAY AND DRAINAGE ENGINEERING DESIGN

SW3P PLAN
STA 121+00 TO STA 131+00

F&N JOB NO.	OFF00000
DATE	00/00/00
DESIGNED	
DRAWN	
REVISED	
CHECKED	
FILE NAME	SW3P_12.dgn

NO.	ISSUES	BY	DATE

VERIFY SCALE
0 1
Bar is one inch on original drawing.
If not one inch on this sheet, adjust scale.

SHEET

SEQ.

ISSUE FOR BID

MicroStation V8 User: freesepw11lcs02\ICS_pdf_work_dir\3814\28171_14\SW3P_12.dgn
Plotter: C:\Program Files (x86)\Common Files\InterPlot\PLOT\bin\bin\vnn.plt
Plot Scale: 50.000 / in.
Date: Apr. 03, 2023 - 11:04:48 PM
Model: Default
Project: Freese and Nichols, Inc.

Office: Date: Apr. 03, 2023 - 11:04:48 PM User: freesepw11lcs02\ICS_pdf_work_dir\3814\28171_14\SW3P_12.dgn

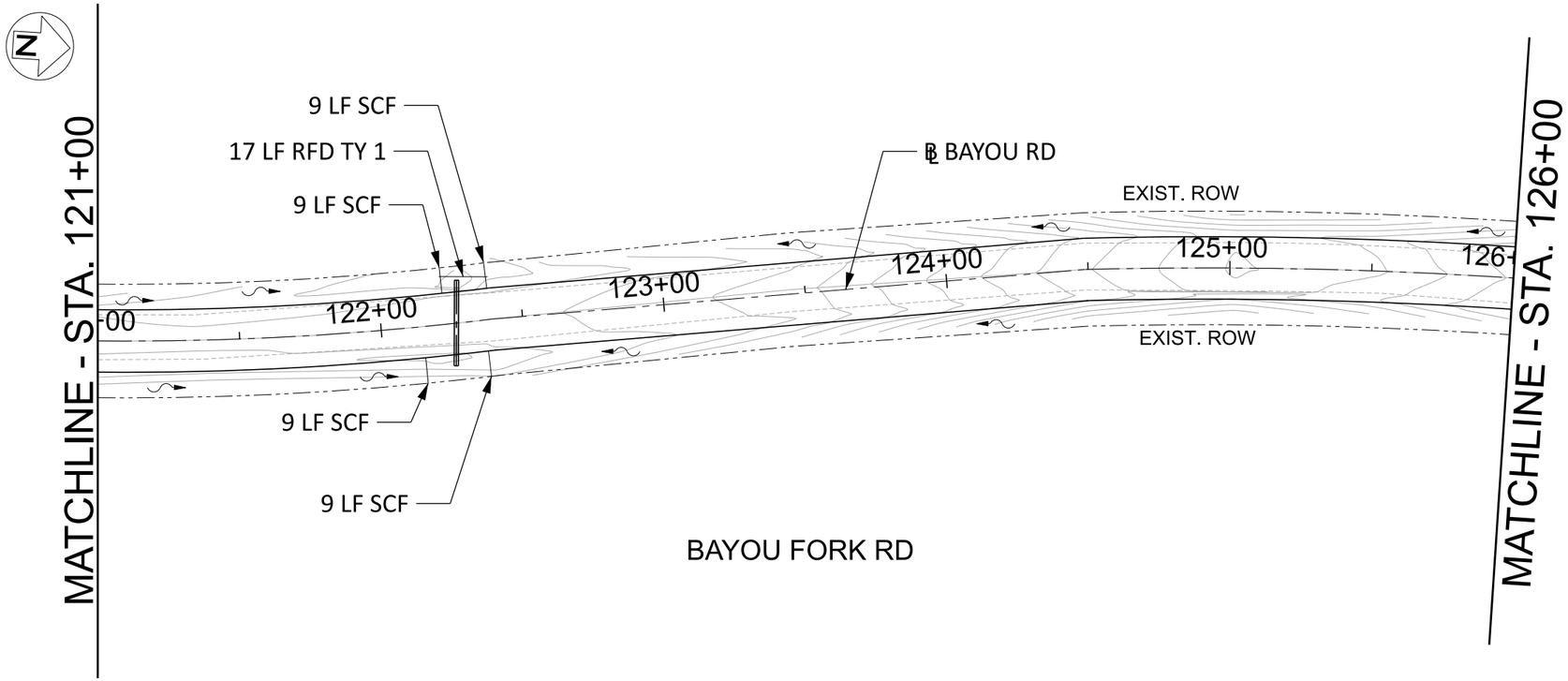

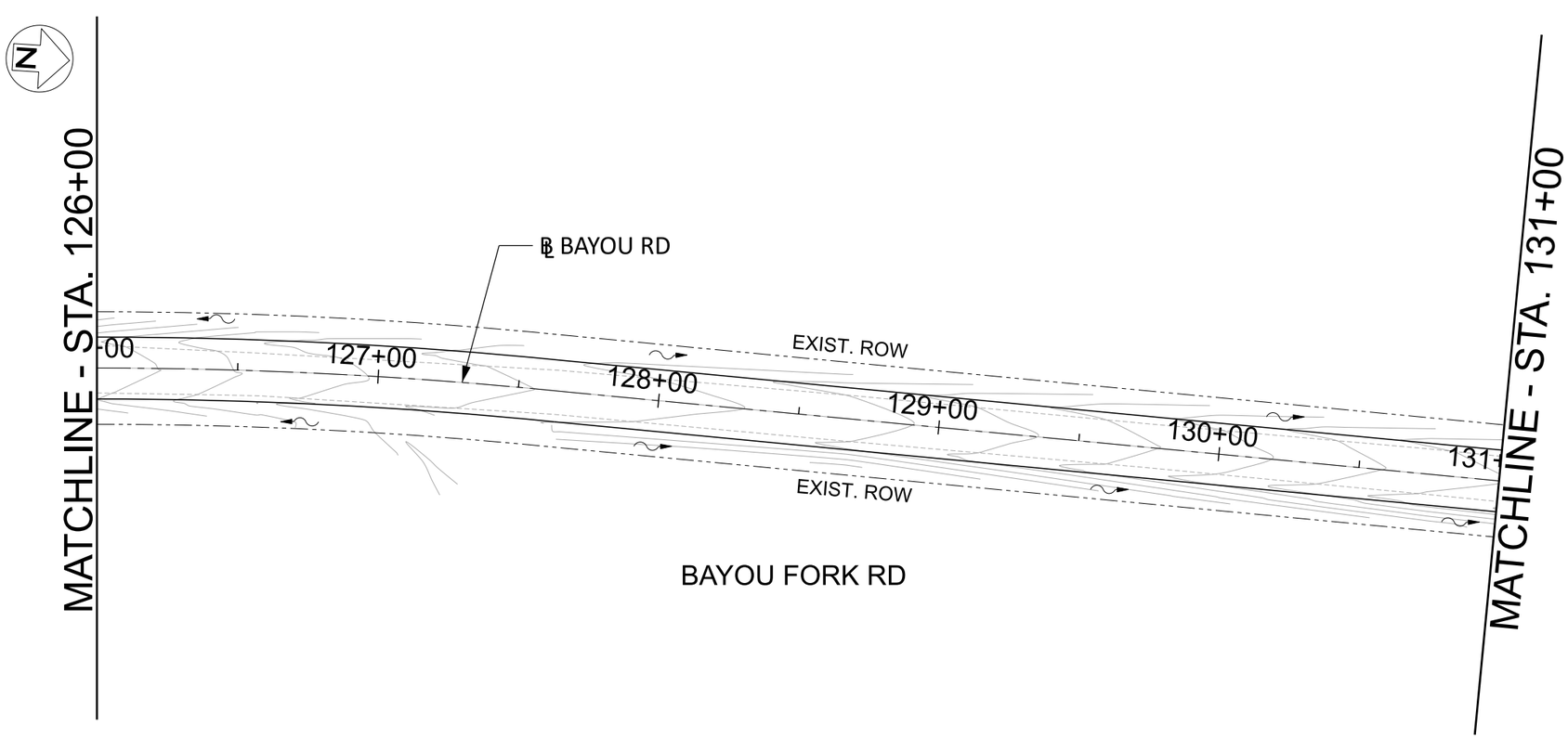

LEGEND

- EXIST. ROW
- SCF — SILT FENCE
- RFD-1 — ROCK FILTER DAM
- FLOW DIRECTION

FREESE AND NICHOLS, INC.
TEXAS REGISTERED ENGINEERING FIRM F-2144

STATE OF TEXAS
COURTNEY I CUNNINGHAM
141398
LICENSED PROFESSIONAL ENGINEER
04-11-2023

FREESE AND NICHOLS
801 Cherry Street, Suite 2800
Fort Worth, TX 76102
Phone - (817) 735-7300
Web - www.freese.com

SABINE RIVER AUTHORITY TOLEDO BEND FISHING TOURNAMENT SITE
ROADWAY AND DRAINAGE ENGINEERING DESIGN

SW3P PLAN
STA 111+00 TO STA 121+00

NO.	ISSUES	BY	DATE

F&N JOB NO. OFF00000
DATE 00/00/00
DESIGNED
DRAWN
REVISED
CHECKED
FILE NAME SW3P_13.dgn

VERIFY SCALE
0 1
Bar is one inch on original drawing.
If not one inch on this sheet, adjust scale.

SHEET
SEQ.

ISSUE FOR BID

MicroStation V8 User: freesepw11lcs02
Plotter: C:\Program Files (x86)\Common Files\InterPlot\IPLOT\bin\ipl6rvn.pdf
Plot Scale: 50.000 ' / in.
Date: Apr. 03, 2023 - 11:05:11 PM
Project: Freese and Nichols, Inc.

Office:
Date: Apr. 03, 2023 - 11:05:11 PM
User: freesepw11lcs02\ICS_pdf_work_dir\3814\28171_12\SW3P_13.dgn

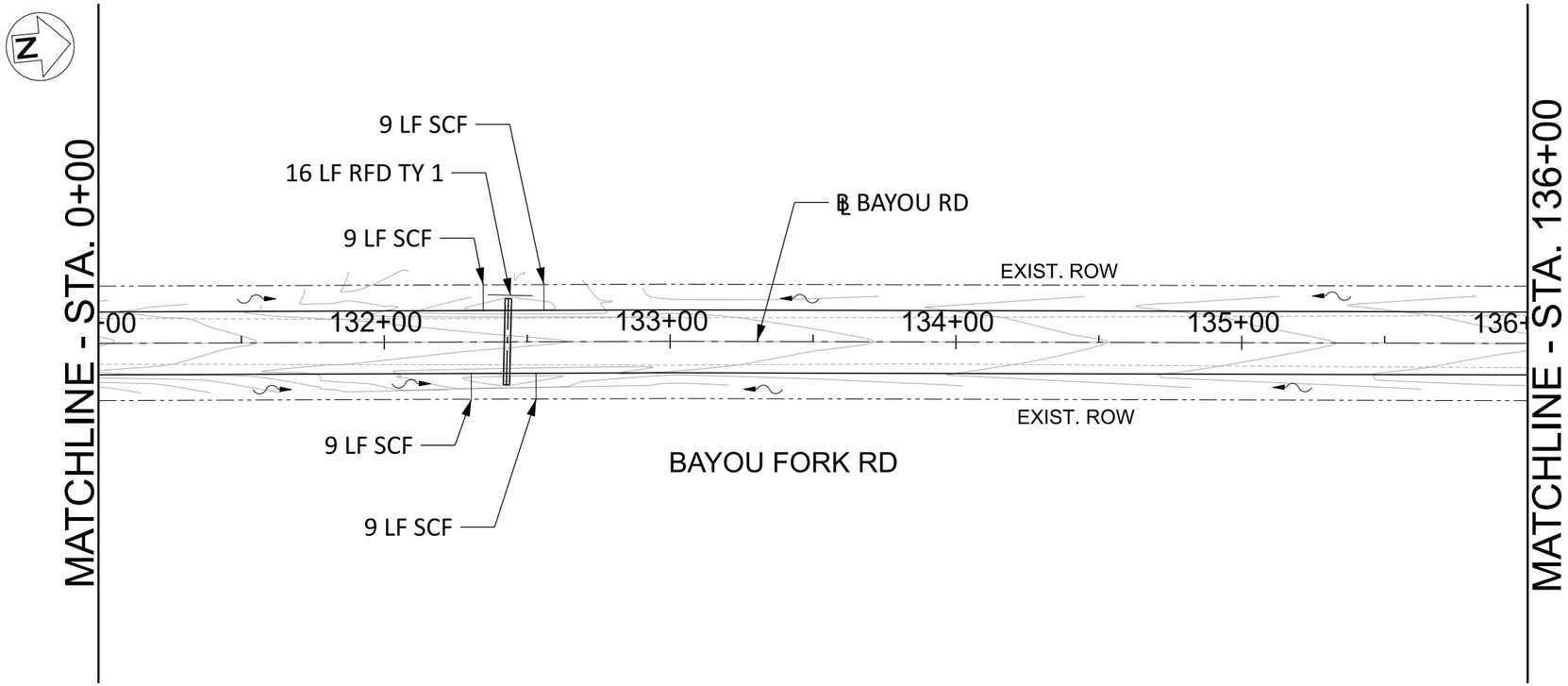

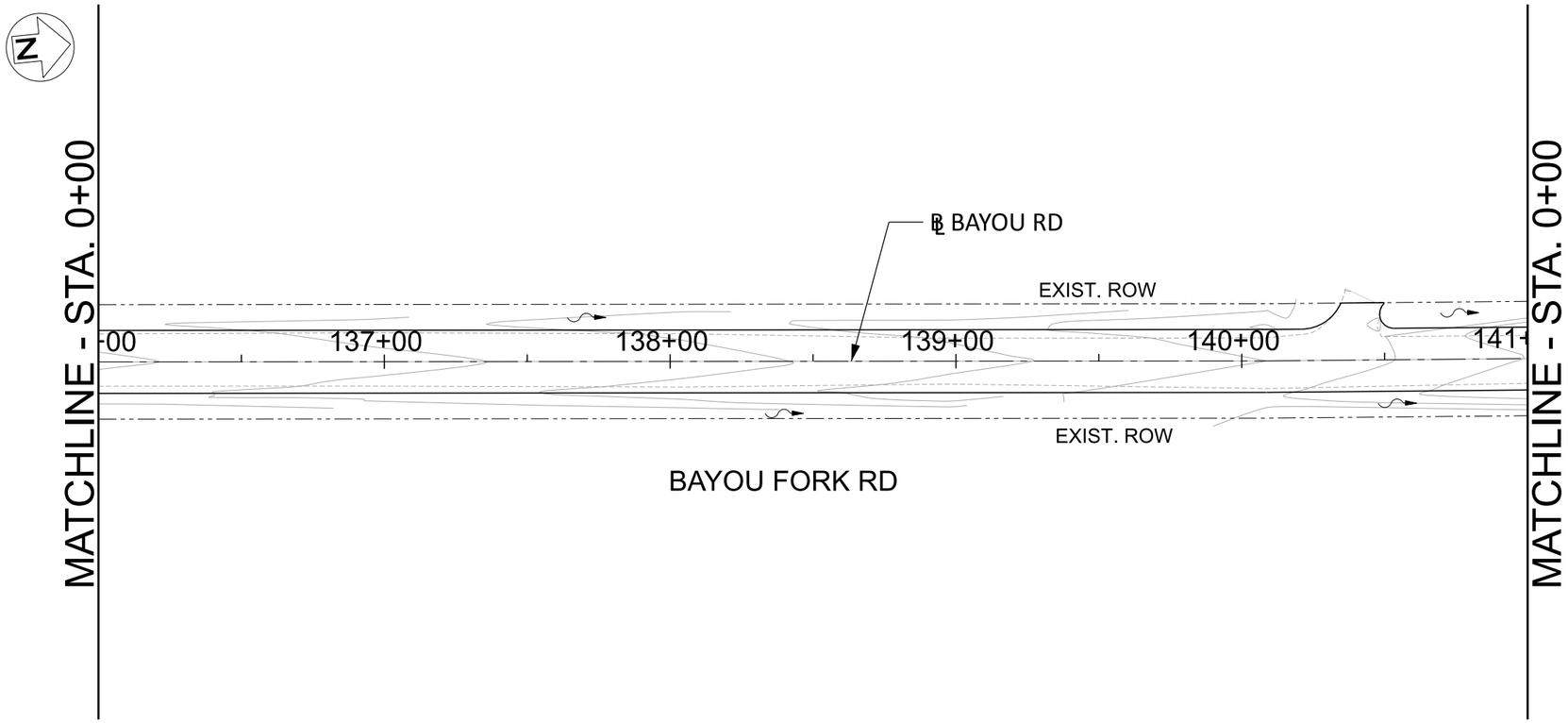

LEGEND

- EXIST. ROW
- SCF — SILT FENCE
- RFD-1 — ROCK FILTER DAM
- FLOW DIRECTION

FREESE AND NICHOLS, INC.
TEXAS REGISTERED ENGINEERING FIRM F-2144

STATE OF TEXAS
COURTNEY I CUNNINGHAM
141398
LICENSED PROFESSIONAL ENGINEER
04-11-2023

FREESE AND NICHOLS
801 Cherry Street, Suite 2800
Fort Worth, TX 76102
Phone - (817) 735-7300
Web - www.freese.com

SABINE RIVER AUTHORITY TOLEDO BEND FISHING TOURNAMENT SITE
ROADWAY AND DRAINAGE ENGINEERING DESIGN

SW3P PLAN
STA 131+00 TO STA 141+00

F&N JOB NO. OFF00000
DATE 00/00/00
DESIGNED
DRAWN
REVISED
CHECKED
FILE NAME SW3P_14.dgn

NO.	ISSUES	BY	DATE

VERIFY SCALE Bar is one inch on original drawing. If not one inch on this sheet, adjust scale.
0 1

SHEET

SEQ.

ISSUE FOR BID

MicroStation V8 User: freesepw11
Office: I:\freesepw11\ics02\ICS_pdf_work_dir\3814\28171_13\SW3P_14.dgn
Plotter: C:\Program Files\Bentley\Common\Plotters\PDF Printer.pltr Plot Offset: 0.000 / 0.000
Plot Scale: 50.000 / 1 Model: Default
Date: Apr. 03, 2023 - 11:02:18 PM Project: Freese and Nichols, Inc.

Office: Date: Apr. 03, 2023 - 11:02:18 PM User: freesepw11 File: I:\freesepw11\ics02\ICS_pdf_work_dir\3814\28171_13\SW3P_14.dgn

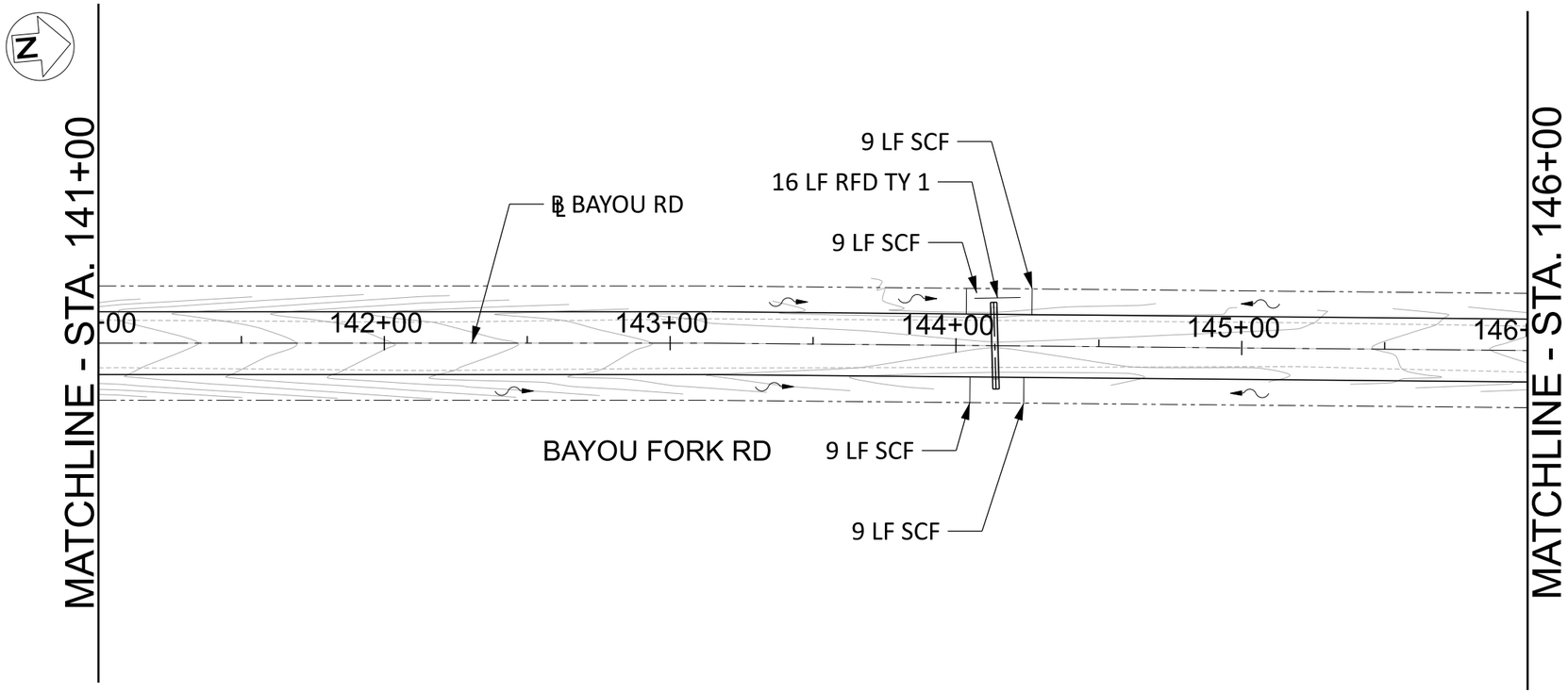

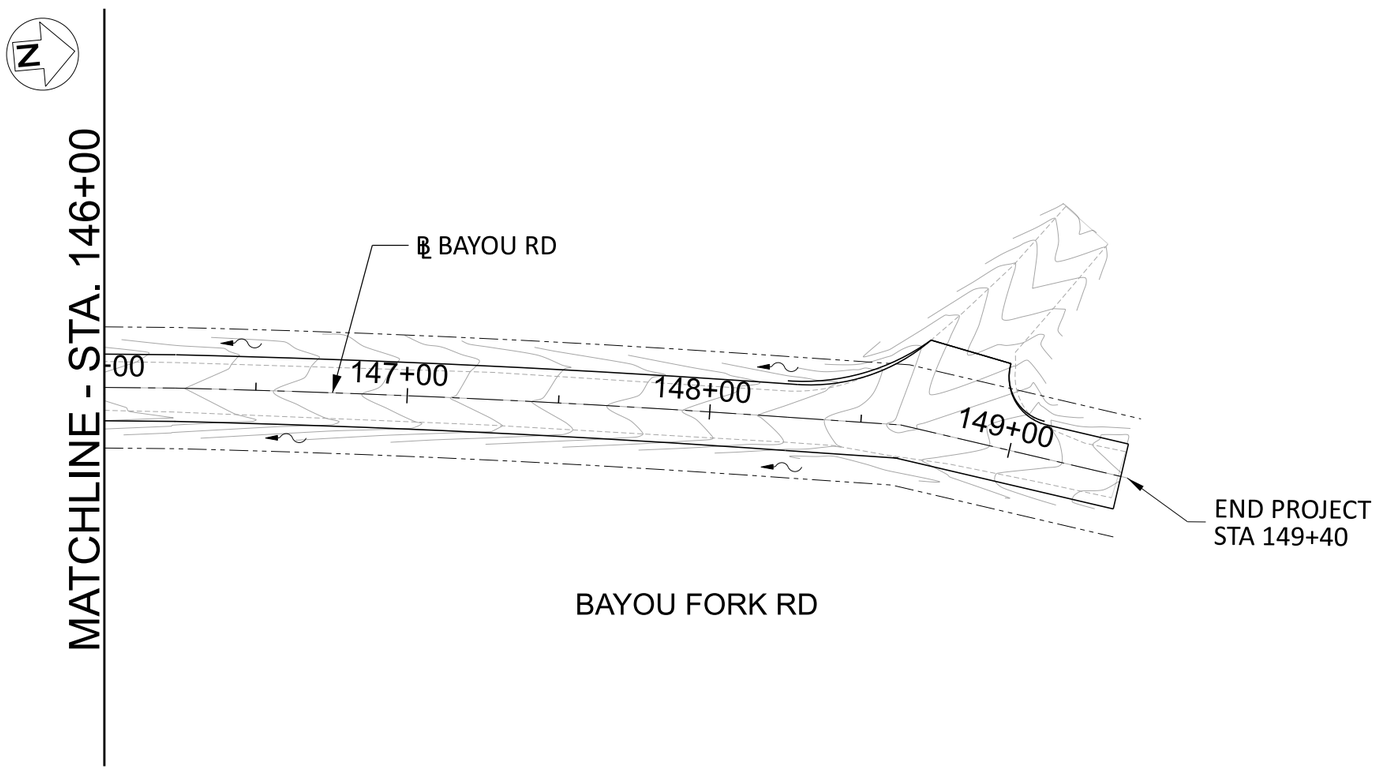

LEGEND

- EXIST. ROW
- SCF — SILT FENCE
- RFD-1 — ROCK FILTER DAM
- FLOW DIRECTION

FREESE AND NICHOLS, INC.
TEXAS REGISTERED ENGINEERING FIRM F-2144

STATE OF TEXAS
COURTNEY I CUNNINGHAM
141398
LICENSED PROFESSIONAL ENGINEER
04-11-2023

FREESE AND NICHOLS
801 Cherry Street, Suite 2800
Fort Worth, TX 76102
Phone - (817) 735-7300
Web - www.freese.com

SABINE RIVER AUTHORITY TOLEDO BEND FISHING TOURNAMENT SITE

ROADWAY AND DRAINAGE ENGINEERING DESIGN

SW3P PLAN
STA 141+00 TO END PROJECT

NO.	ISSUES	BY	DATE

F&N JOB NO. OFF00000
DATE 00/00/00
DESIGNED
DRAWN
REVISED
CHECKED
FILE NAME SW3P_15.dgn

VERIFY SCALE Bar is one inch on original drawing. If not one inch on this sheet, adjust scale. 0 1

SHEET

SEQ.

ISSUE FOR BID

MicroStation V8 User: freesepw11\cic02
Plotter: C:\Users\freesepw11\appdata\local\bentley\microstation\ pltcfg\pltcfg.pltcfg
Pltcfg Name: Freese and Nichols, Inc.
Pltcfg Date: 3/31/2023 - 11:09:32 PM
Pltcfg Author: freesepw11\cic02
Pltcfg Flags: Default
Pltcfg Layout: Default
Pltcfg Scale: 50.000 : 1 in.
Pltcfg Area: Plot Entire Design
Pltcfg Offset: 0.000, 0.000
Pltcfg Rotation: 0°
Pltcfg Model: Default
Pltcfg Project: Freese and Nichols, Inc.
Date: Apr. 03, 2023 - 11:09:32 PM

Office: Date: Apr. 03, 2023 - 11:04:32 PM User: freesepw11\cic02 File: \\freesepw11\cic02\CS_pdf_work_dir\3814\28171_15\SW3P_15.dgn

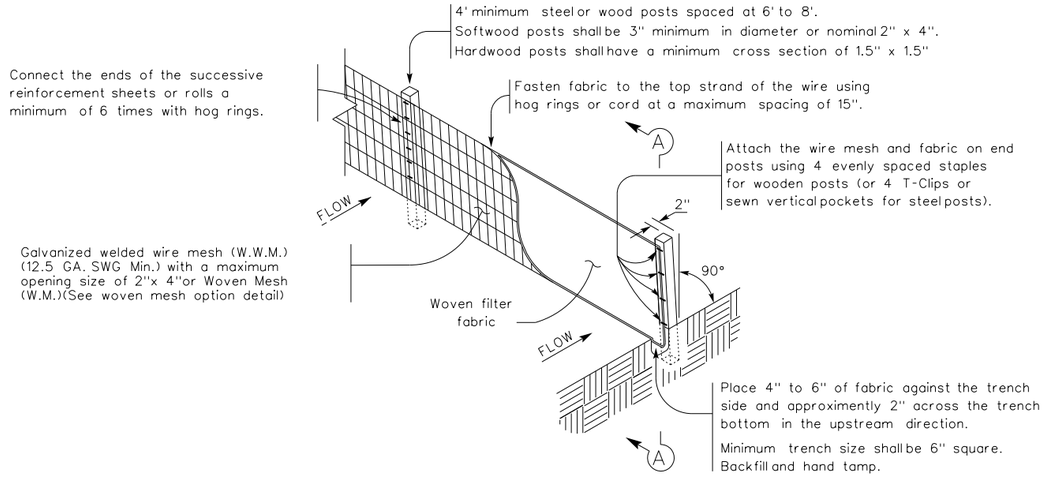

TEMPORARY SEDIMENT CONTROL FENCE

SCF

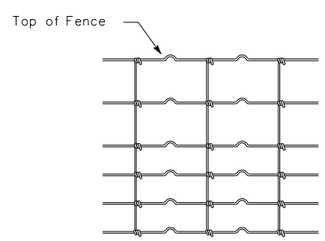

HINGE JOINT KNOT WOVEN MESH (OPTION) DETAIL

Galvanized hinge joint knot woven mesh (12.5 GA.SWG Min.) requires a minimum of five horizontal wires spaced at a maximum of 12 inches apart and all vertical wires spaced at a maximum of 12 inches apart.

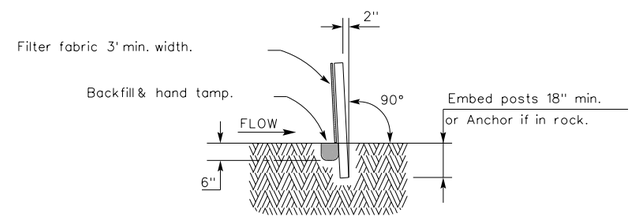

SECTION A-A

SEDIMENT CONTROL FENCE USAGE GUIDELINES

A sediment control fence may be constructed near the downstream perimeter of a disturbed area along a contour to intercept sediment from overland runoff. A 2 year storm frequency may be used to calculate the flow rate to be filtered.

Sediment control fence should be sized to filter a maximum flow through rate of 100 GPM/FT^2. Sediment control fence is not recommended to control erosion from a drainage area larger than 2 acres.

LEGEND

Sediment Control Fence

SCF

ISSUE FOR BID

FREESE AND NICHOLS, INC.
TEXAS REGISTERED ENGINEERING FIRM F-2144

STATE OF TEXAS
COURTNEY I CUNNINGHAM
141398
LICENSED
PROFESSIONAL ENGINEER
04-11-2023

FREESE AND NICHOLS
801 Cherry Street, Suite 2800
Fort Worth, TX 76102
Phone - (817) 735-7300
Web - www.freese.com

SABINE RIVER AUTHORITY TOLEDO BEND FISHING TOURNAMENT SITE

ROADWAY AND DRAINAGE ENGINEERING DESIGN

STORM WATER POLLUTION PREVENTION PLAN DETAILS 01

NO.	ISSUES	BY	DATE

F&N JOB NO. OFF00000
DATE 00/00/00
DESIGNED
DRAWN
REVISED
CHECKED
FILE NAME SW3P_DETAIL 01

VERIFY SCALE Bar is one inch on original drawing. If not one inch on this sheet, adjust scale.
0 1

SHEET

SEQ.

MicroStation V8 User: 03952 Office:
pw:\\freese-pw.bentley.com:freese-pw-01\Documents\FNI - Texas\SRA22771 (Transportation)\2 Drawings\2.04 Infrastructure\2.04.02 Sheets\2.04.02.13 Standards\Roadway Standards\SW3P_DETAIL 01
Plotter: c:\pwworks\pwfreese\drivers\bentley.pltr Level: Levels: 1,2,3,4,5,6,7,8,9,10,11,12,13,14,15,16,17,18,19,20,21,22,23,24,25,26,27,28,29,30,31,32,33,34,35,36,37,38,39,40,41,42,43,44,45,46,47,48,49,50,51,52,53,54,55,56,57,58,59,60,61,62,63
Plot Scale: 2.1083 FT / IN. Model: Default
Date: Apr. 11, 2023 - 02:55:49 PM Project: Freese and Nichols, Inc.

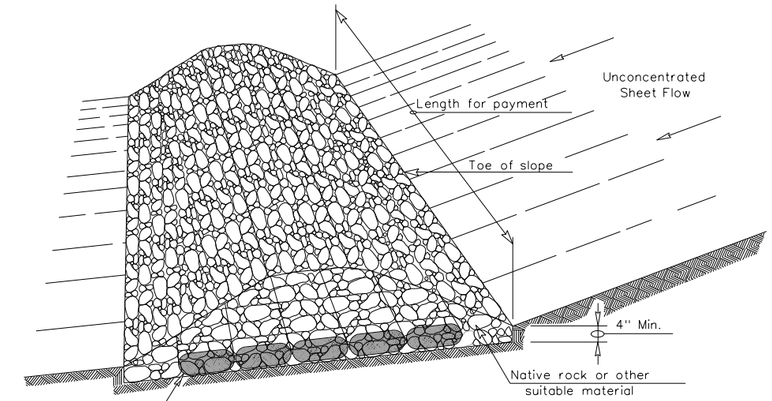

FILTER DAM AT TOE OF SLOPE

RFD1

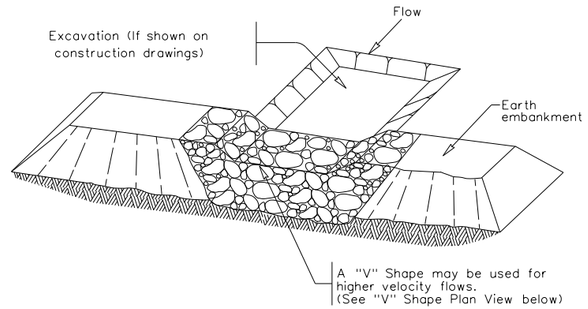

FILTER DAM AT SEDIMENT TRAP

RFD1 OR RFD2

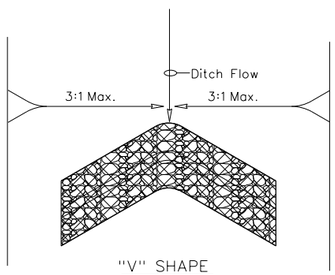

"V" SHAPE
PLAN VIEW

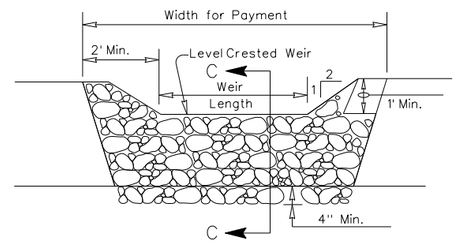

PROFILE

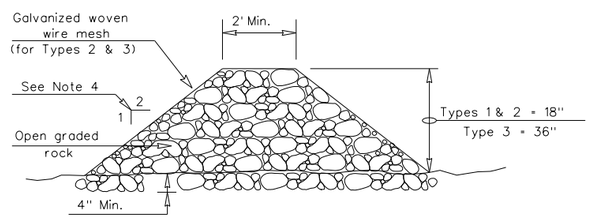

SECTION C-C

GENERAL NOTES

1. If shown on the plans or directed by the Engineer, filter dams should be placed near the toe of slopes where erosion is anticipated, upstream and/or downstream at drainage structures, and in roadway ditches and channels to collect sediment.
2. Materials (aggregate, wire mesh, sandbags, etc.) shall be as indicated by the specification for "Rock Filter Dams for Erosion and Sedimentation Control".
3. The rock filter dam dimensions shall be as indicated on the SW3P plans.
4. Side slopes should be 2:1 or flatter. Dams within the safety zone shall have sideslopes of 6:1 or flatter.
5. Maintain a minimum of 1' between top of rock filter dam weir and top of embankment for filter dams at sediment traps.
6. Filter dams should be embedded a minimum of 4" into existing ground.
7. The sediment trap for ponding of sediment laden runoff shall be of the dimensions shown on the plans.
8. Rock filter dam types 2 & 3 shall be secured with 20 gauge galvanized woven wire mesh with 1" diameter hexagonal openings. The aggregate shall be placed on the mesh to the height & slopes specified. The mesh shall be folded at the upstream side over the aggregate and tightly secured to itself on the downstream side using wire ties or hog rings. For in stream use, the mesh should be secured or staked to the stream bed prior to aggregate placement.
9. Flow outlet should be onto a stabilized area (vegetation, rock, etc.).
10. The guidelines shown hereon are suggestions only and may be modified by the Engineer.

ROCK FILTER DAM USAGE GUIDELINES

Rock Filter Dams should be constructed downstream from disturbed areas to intercept sediment from overland runoff and/or concentrated flow. The dams should be sized to filter a maximum flow through rate of 60 GPM/FT of cross sectional area. A 2 year storm frequency may be used to calculate the flow rate.

Type 1 (18" high with no wire mesh) (3" to 6" aggregate): Type 1 may be used at the toe of slopes, around inlets, in small ditches, and at dike or swale outlets. This type of dam is recommended to control erosion from a drainage area of 5 acres or less. Type 1 may not be used in concentrated high velocity flows (approximently 8 Ft/Sec or more) in which aggregate wash out may occur. Sandbags may be used at the embedded foundation (4" deep min.) for better filtering efficiency of low flows if called for on the plans or directed by the Engineer.

ISSUE FOR BID

FREESE AND NICHOLS, INC.
TEXAS REGISTERED ENGINEERING FIRM F-2144

STATE OF TEXAS
COURTNEY I CUNNINGHAM
141398
LICENSED PROFESSIONAL ENGINEER
04-11-2023

FREESE AND NICHOLS
801 Cherry Street, Suite 2800
Fort Worth, TX 76102
Phone - (817) 735-7300
Web - www.freese.com

SABINE RIVER AUTHORITY TOLEDO BEND FISHING TOURNAMENT SITE

ROADWAY AND DRAINAGE ENGINEERING DESIGN

STORM WATER POLLUTION PREVENTION PLAN
DETAILS 02

NO.	ISSUES	BY	DATE

F&N JOB NO. OFF00000
DATE 00/00/00
DESIGNED
DRAWN
REVISED
CHECKED
FILE NAME SW3P_DETAIL 02

VERIFY SCALE Bar is one inch on original drawing. If not one inch on this sheet, adjust scale.
0 1

SHEET

SEQ.

MicroStation V8 User: 03952 Office:
pw:\\freese-pw.bentley.com:freese-pw-01\Documents\FNI - Texas\SRA22771 (Transportation)\2 Drawings\2.04 Infrastructure\2.04.02 Sheets\2.04.02.13 Standards\Roadway Standards\SW3P_DETAIL 02
Plotter: Canon imageRUNNER ADVANCE C7270 PS3 (Color) Driver(s): PS4Driver.pltcfg
Plot Scale: 2.1154 FT / In. "Model Default"
Date: Apr. 11, 2023 - 02:57:02 PM Project:Freese and Nichols, Inc.

Office: Date:Apr. 11, 2023 - 02:57:02 PM User:03952 File:pw:\\freese-pw.bentley.com:freese-pw-01\Documents\FNI - Texas\SRA22771 (Transportation)\2 Drawings\2.04 Infrastructure\2.04.02 Sheets\2.04.02.13 Standards\Roadway Standards\SW3P_DETAIL 02